

1:10 Scale 2WD Electric Off Road Competition Buggy Kit Manual

#6062 RC10 Factory Team USA Edition Buggy Kit

WeAreAE

CHAMPIONS by DESIGN

AssociatedElectrics.com

TEAM ASSOCIATED

:: Introduction

Thank you for purchasing this Team Associated product. This assembly manual contains instructions and tips for building and maintaining your new vehicle. Please take a moment to read through the manual and familiarize yourself with the steps. We are continually changing and improving our designs; therefore, actual parts may appear slightly different than the illustrations. New parts will be noted on supplementary sheets located in the appropriate parts bags.
Check each bag for these sheets before you start to build.
Check www.AssociatedElectrics.com for the latest versions of our instruction manuals.

:: RC10 USA Kit Features

- Factory Team vintage body
- New Tapered rear CVA driveshafts for added clearance
- Exclusive Silver FT carbon fiber front and rear shock towers (big bore compliant)
- Rear lower CG shock tower integrates B6 rear wing mount
- B6 rear wing mount included
- Factory Team 12mm hex front steering block
- Factory Team 12mm hex front axle
- Factory Team 12mm Hex rear CVA's included
- 12mm Hex B7 wheels included
- B7 Servo mount included
- Heavy Duty Metric Ball Studs
- Exclusive silver carbon fiber transmission brace
- Heavy Duty Ball Cups and 3.5mm adjustable turnbuckles
- New Factory Team captured hinge pins
- Factory Team Chrome shock shafts included
- 13mm big bore factory team shocks included
- All white plastics
- Full ball bearings included
- New Red anodized chassis, noseplate and motorplate
- Clear RC10 B7 wing included
- Factory Team vintage logo decal sheet
- V2 slipper system included
- Independent suspension with durable long front arms and refined geometry
- World's Car bellcrank steering
- Body velcros to side of chassis
- Exclusive chassis decal and chassis laser etching included

:: Additional

Your new kit comes unassembled and requires the following items for completion (refer to www.AssociatedElectrics.com and www.Reedypower.com for suggestions):

- R/C two channel surface frequency radio system
- AA-size batteries for transmitter
- Electronic Speed Control ("ESC")
- Steering servo
- R/C electric motor (540 size)
- Pinion gear (48P), size determined by type/turn or kV of motor
- Battery charger (a peak detection charger, or LiPo compatible charger)
- 2 cell LiPo battery pack
- Polycarbonate specific spray paint
- Cyanoacrylate glue ("CA") (#1697)
- Thread locking compound (#1596)
- Tires and Inserts, Fronts and Rears
- Wheels w/12mm Hex
  Front Wheels #9690 (white), #9691 (yelllow)
  Rear Wheels #9695 (white), #9696 (yelllow)
- Slim Front Wheels w/12mm Hex (carpet/astro turf)
  #91757 (white) #91758 (yelllow)

:: Other Helpful Items

- Silicone Shock Fluid (Refer to AssociatedElectrics.com for complete listings)
- Green Slime shock lube (#1105)
- FT Turnbuckle Wrench, 4mm (#1112)
- FT Body Reamer (#1499)
- Shock Pliers (#1681)
- Wire Cutters
- FT Hex/Nut Wrenches 11/32"(#1519)
- FT Ballcup Wrench (#1579)
- Hobby Knife
- Needle Nose Pliers
- FT Universal Tire Balancer (#1498)
- Calipers or a Precision Ruler
- FT Body Scissors (#1737)
- Soldering Iron

Associated Electrics, Inc.
21062 Bake Parkway.
Lake Forest, CA 92630

ASSOCIATED ELECTRICS
Since 1984

Customer Service
Tel: 949.544.7500
Fax: 949.544.7501

http://www.AssociatedElectrics.com • http://www.instagram.com/teamassociatedrc/ • http://www.facebook.com/TeamAssociated/

Hardware - 1:1 Scale View

Cap Head (shcs)

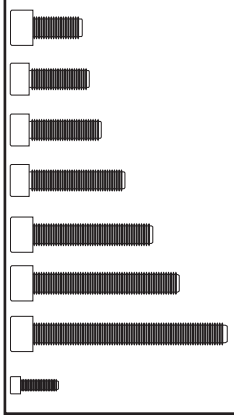

4-40x1/4" (6649)
4-40x5/16" (6649)
4-40x3/8"
4-40x1/2" (6649)
4-40x5/8" (6926)
4-40x3/4" (6649)
4-40x1"
1.6x5mm (91611)

Flat Head (fhcs)

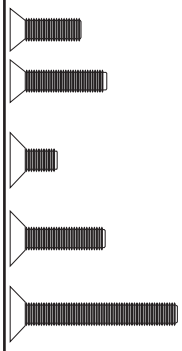

4-40x3/8" (6316)
4-40x1/2" (6538)
8-32x1/4" (6931)
8-32x1/2" (6316)
8-32x7/8" (6316)

Button Head (bhcs)

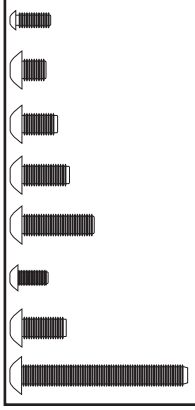

0-80x3/16"
4-40 x .125"
4-40x3/16"
4-40x1/4"
4-40x3/8"
2x4mm (31510)
3x6mm (31531)
3x22mm (25189)

Shims and Washers

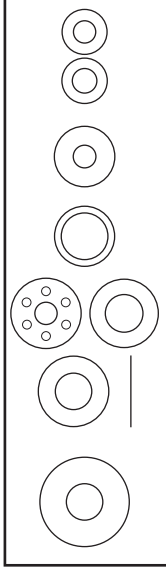

Dogbone spacer
.030 Nylon Spacer (4187)
#4 Washer
1/4" Axle Shim
Diff Thrust Washers
5mm x 9.5mm 0.17mm
#8 Aluminum Thick Washer

Nuts (lock/plain)

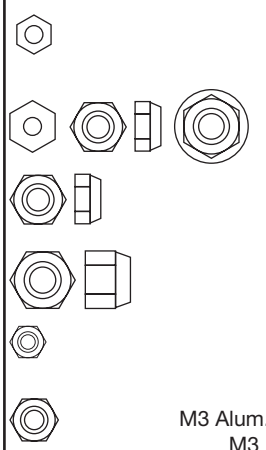

4-40 Small Pattern Plain Nut
4-40 Nuts
5-40 Locknut
8-32 Steel Locknut
M2 Locknut (21689)
M3 Nut (91477)
M3 Alum. Locknut, Blue (31550)
M3 Locknut, Black (25215)

Ball Bearings

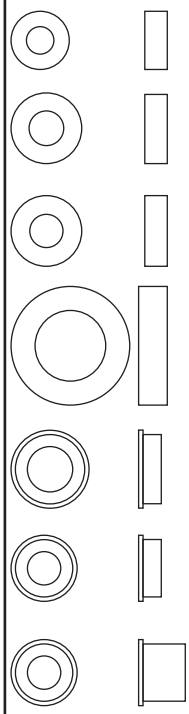

5/32 x 5/16 x 1/8" (6589)
3/16 x 3/8 x 1/8" (3977)
FT 3/16 x 3/8 x 1/8" (6906)
3/16 x 5/16 x 1/8" (6909)
3/8 x 5/8 x 5/32" (3976)
1/4 x 3/8 x 1/8" Flanged (897)
3/16 x 5/16 x 1/8" Flanged
3/16 x 5/16 x 1/4" Flanged

Set Screws



4-40x3/32" (6907)
4-40x1/8"
4-40x5/16"

Diff Balls



3/32 Diff Balls

Notes:

Ballstuds

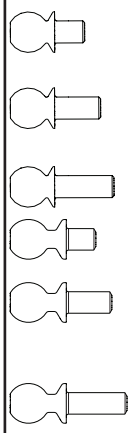

HD 4mm, Short (32041)
HD 6mm, Short (32042)
HD 8mm, Short (32040)
HD 4mm (91451)
HD 6mm (91047)
Ti HD 6mm (91751)
HD 8mm (91048)
Ti HD 8mm (91752)

:: Table of Contents

1..... Cover

2..... Introduction

3.....1:1 Hardware “Fold Out”

4..... Table of Contents

5.....Nose Plate / Steering Build
(Bag A)

6..... Front Suspension Build
(Bag B)

7.....Transmission Build
(Bag C)

9.....Rear Bulkhead Build
(Bag D)

10.....Rear Suspension Build
(Bag E)

11..... Turnbuckles Build
(Bag F)

13.....Shocks Build
(Bag G)

15.....Chassis Build
(Bag H)

16.....Steering Servo Build
(Bag I)

17.....Wing Mount / Wheels / Body /
Accessories Install
(Bag J)

19..... Painting Tips and Notes

20..... Kit Setup Sheet

21..... Blank Setup Sheet

22..... Back Cover

:: Notes

This symbol indicates a special note or instruction in the manual.

x2 This symbol indicates the number of the same part that is required.

2 This symbol indicates the order within a step to assemble parts.

FT FACTORY TEAM This symbol indicates there are optional FT parts available

This symbol indicates a Racers Tip.



There is a 1:1 hardware foldout page in the front of the manual. To check the size of a part, line up your hardware with the correct drawing until you find the exact size. Each part in the foldout has a number assigned to it for ordering replacement parts.

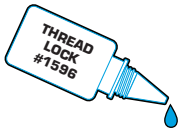

This symbol indicates where Thread Lock Adhesive should be applied. *not included

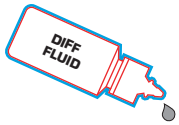

This symbol indicates where Diff Fluid should be applied.

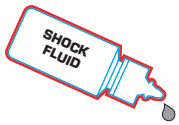

This symbol indicates where Shock Fluid should be applied.



This symbol indicates where FT Silicone Grease should be applied. *not included

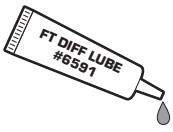

This symbol indicates where FT Diff Lube should be applied. *not included



This symbol indicates where Black Grease should be applied.



This symbol indicates where Green Slime can be applied. *not included

:: Nose Plate / Steering Build - Bag A - Step 1

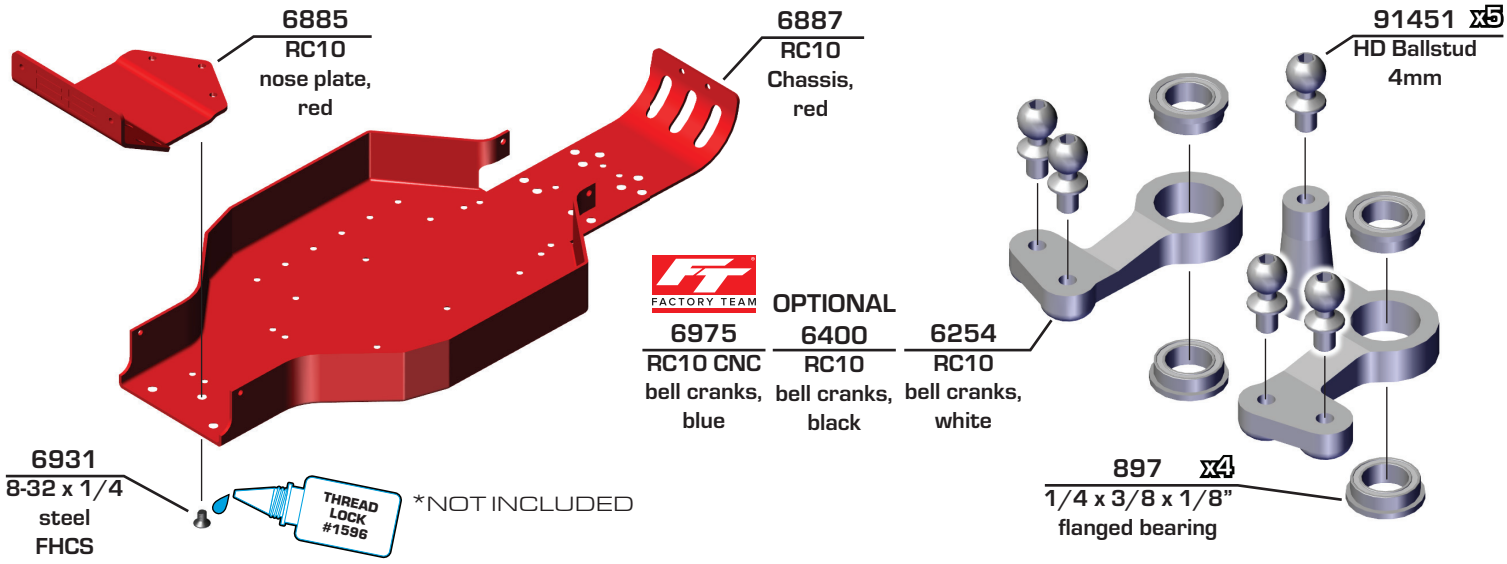

:: Nose Plate / Steering Build - Bag A - Step 2

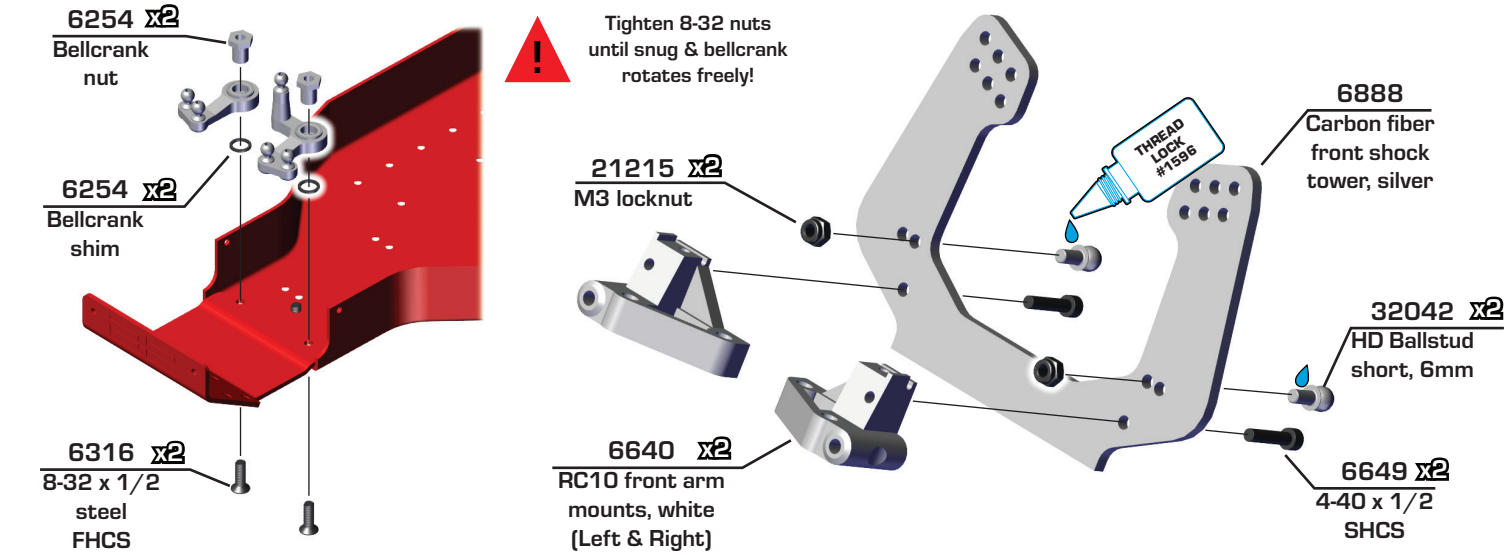

:: Nose Plate / Steering Build - Bag A - Step 3

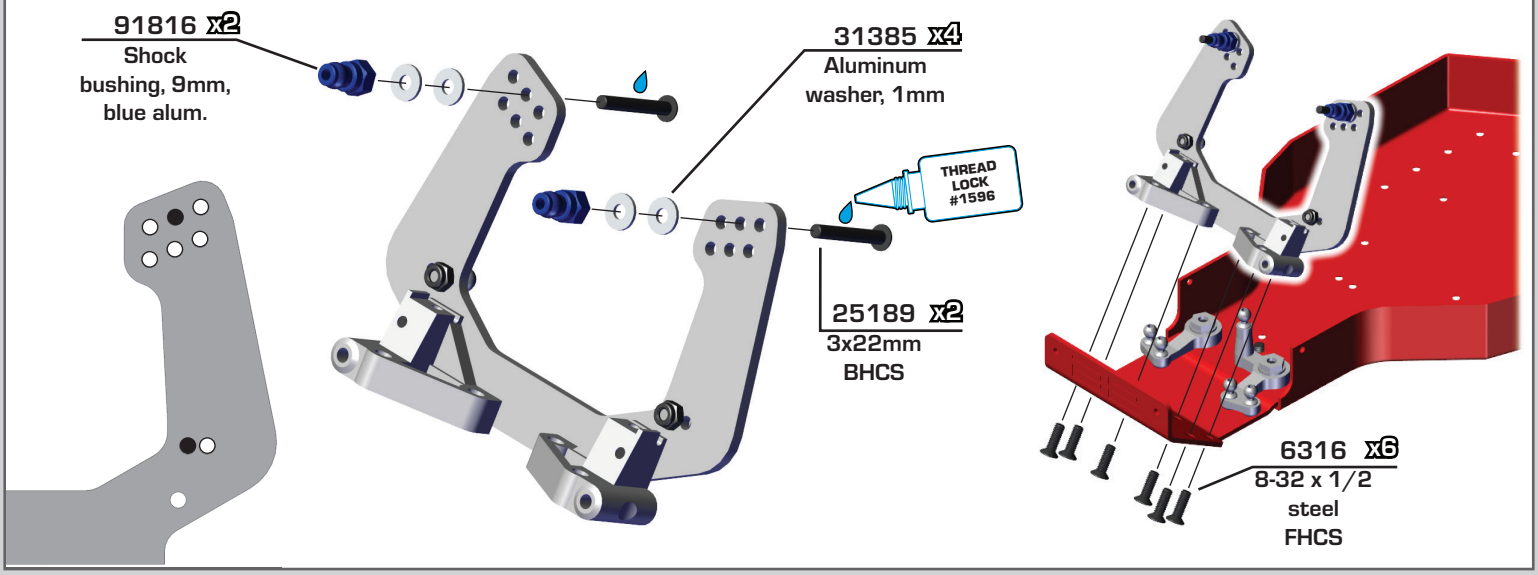

Front Suspension Build - Bag B - Step 1

Left side shown

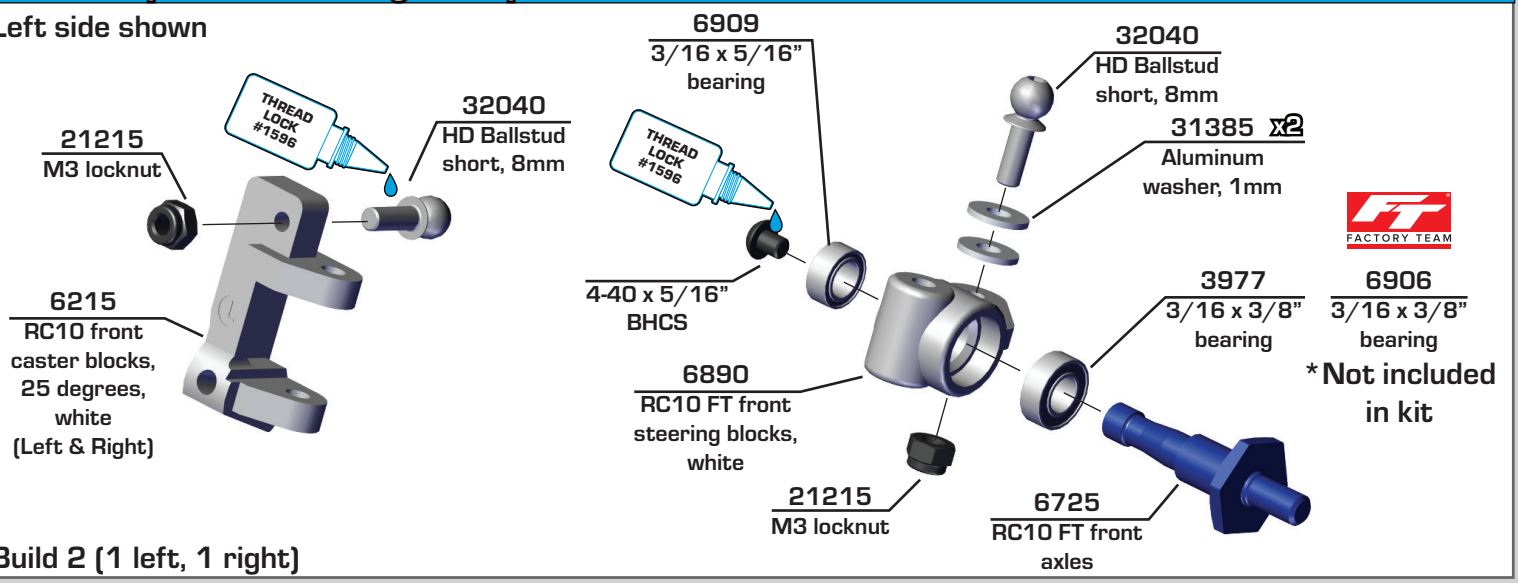

Build 2 (1 left, 1 right)

Front Suspension Build - Bag B - Step 2

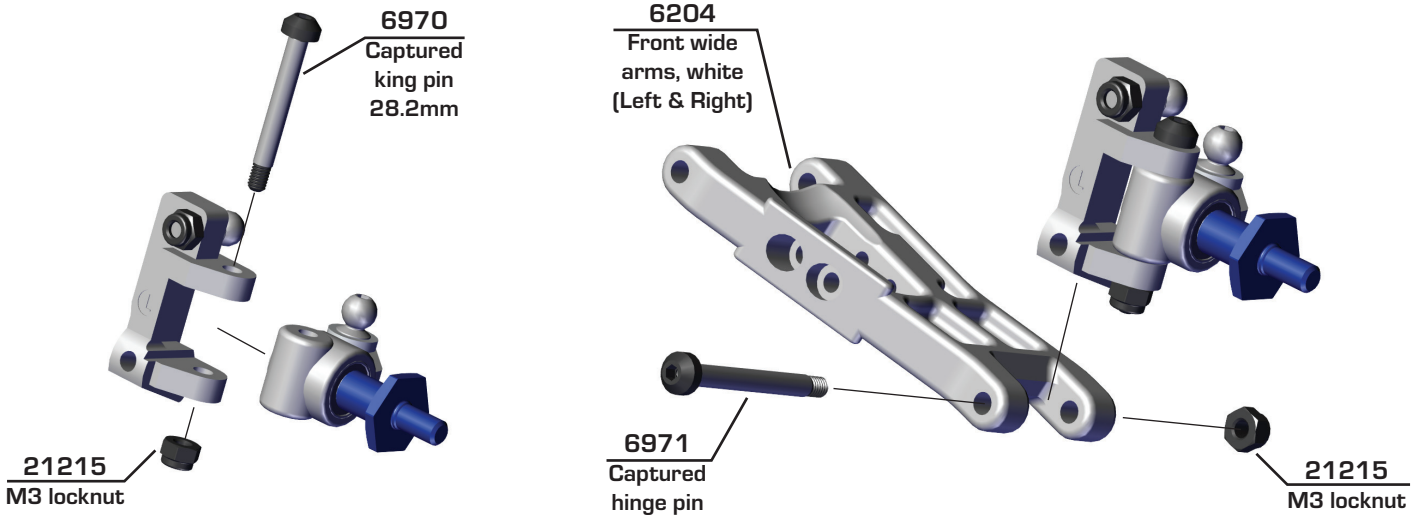

Build 2 (1 left, 1 right)

Front Suspension Build - Bag B - Step 3

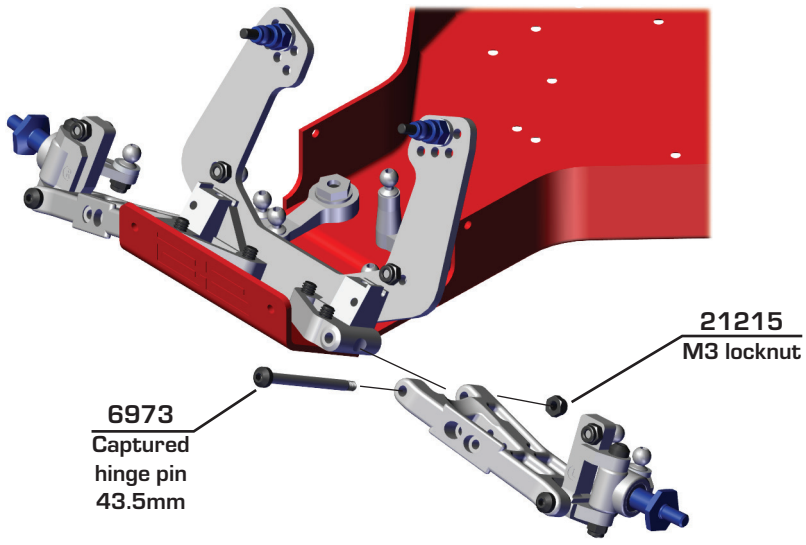

Build 2 (1 left, 1 right)

Transmission Build - Bag C - Step 1

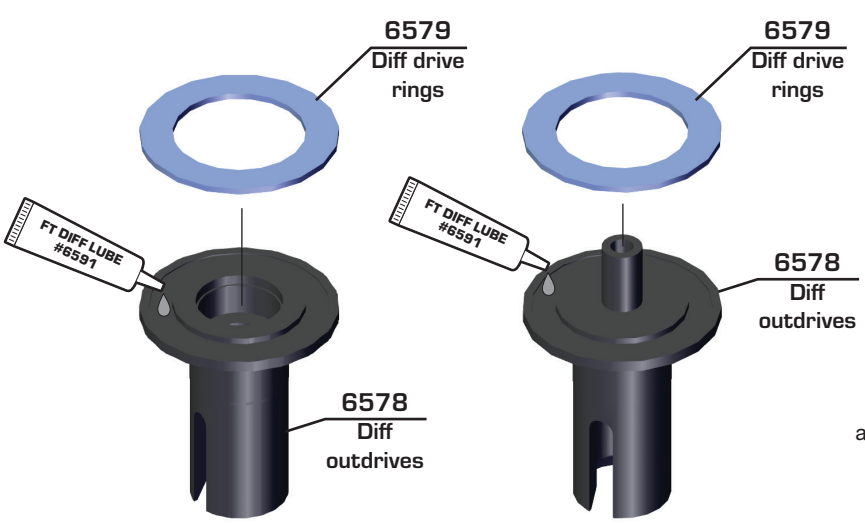

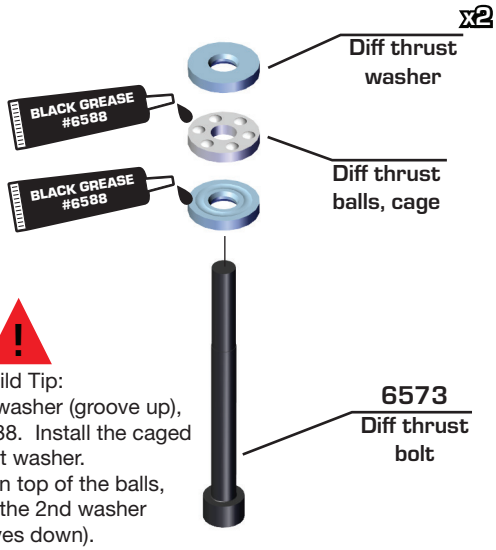

Build Tip:
Install the first washer (groove up), add grease #6588. Install the caged thrust washer.
Add grease on top of the balls, then install the 2nd washer (grooves down).

Transmission Build - Bag C - Step 2

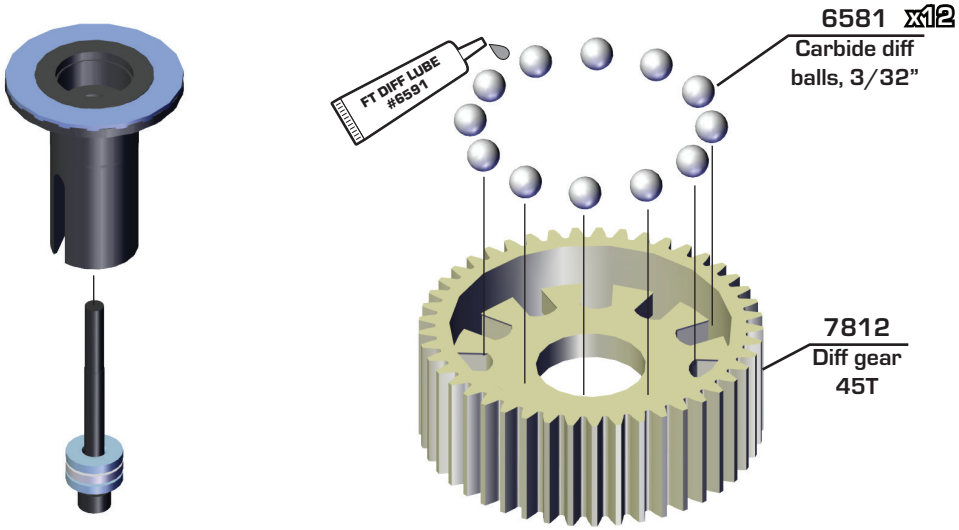

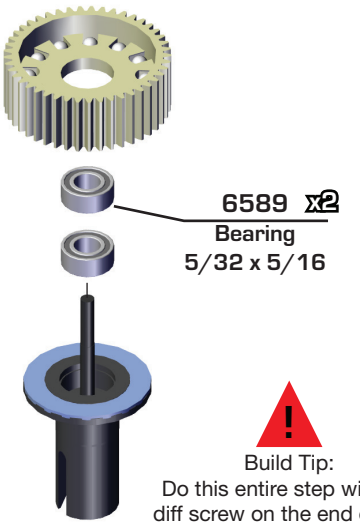

Build Tip:
Do this entire step with the diff screw on the end of your wrench for better control.

Transmission Build - Bag C - Step 3

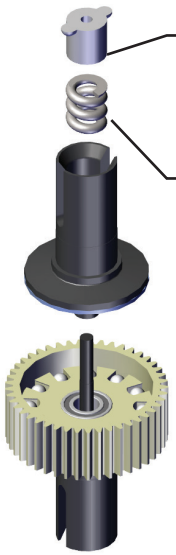

Compress spring first.



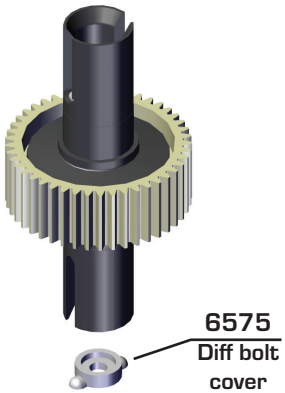

As you tighten the diff bolt, you will notice the T-nut ears moving closer to thebottom of the outdrive slot. This compresses the spring behind the T-nut. The spring should be completely compressed at the time the T-nut reaches the end of the slot.

Caution! Pay close attention to the feeling when the spring is completely compressed. Do not overtighten the bolt. When you feel the spring completely compressed, loosen the diff bolt 1/8 of a turn. Your diff should now operate smoothly but with resistance as the outdrives move in opposite directions.

After you have driven the car once, re-check the diff setting.

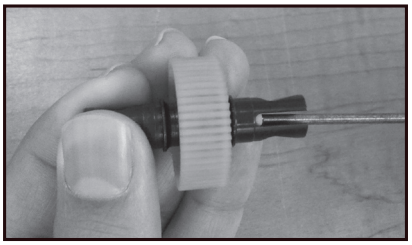

:: Transmission Build - Bag C - Step 4

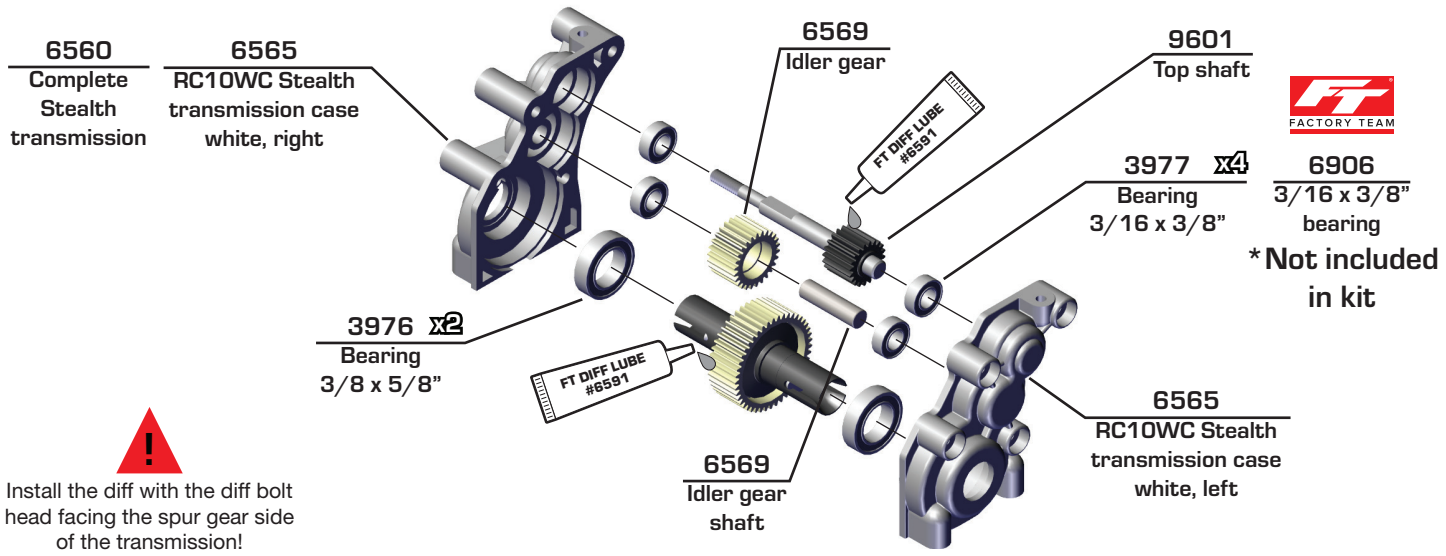

Install the diff with the diff bolt head facing the spur gear side of the transmission!

:: Transmission Build - Bag C - Step 5

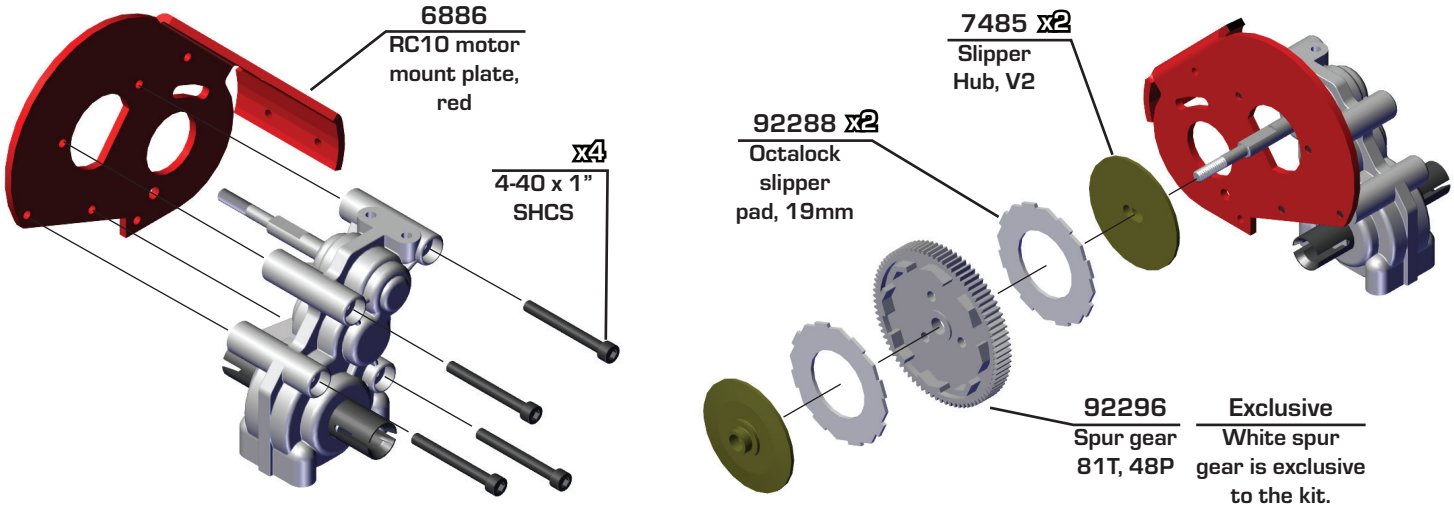

:: Transmission Build - Bag C - Step 6

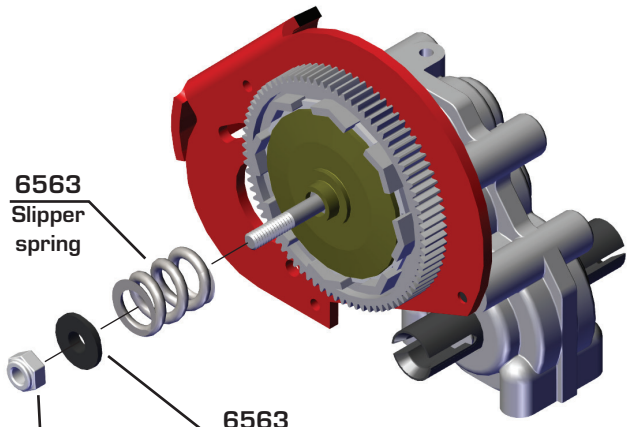

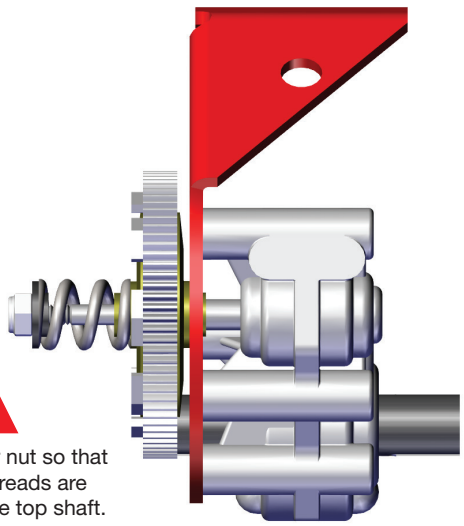

Set the slipper nut so that 2.5mm of threads are showing on the top shaft.

Rear Bulkhead Build - Bag D - Step 1

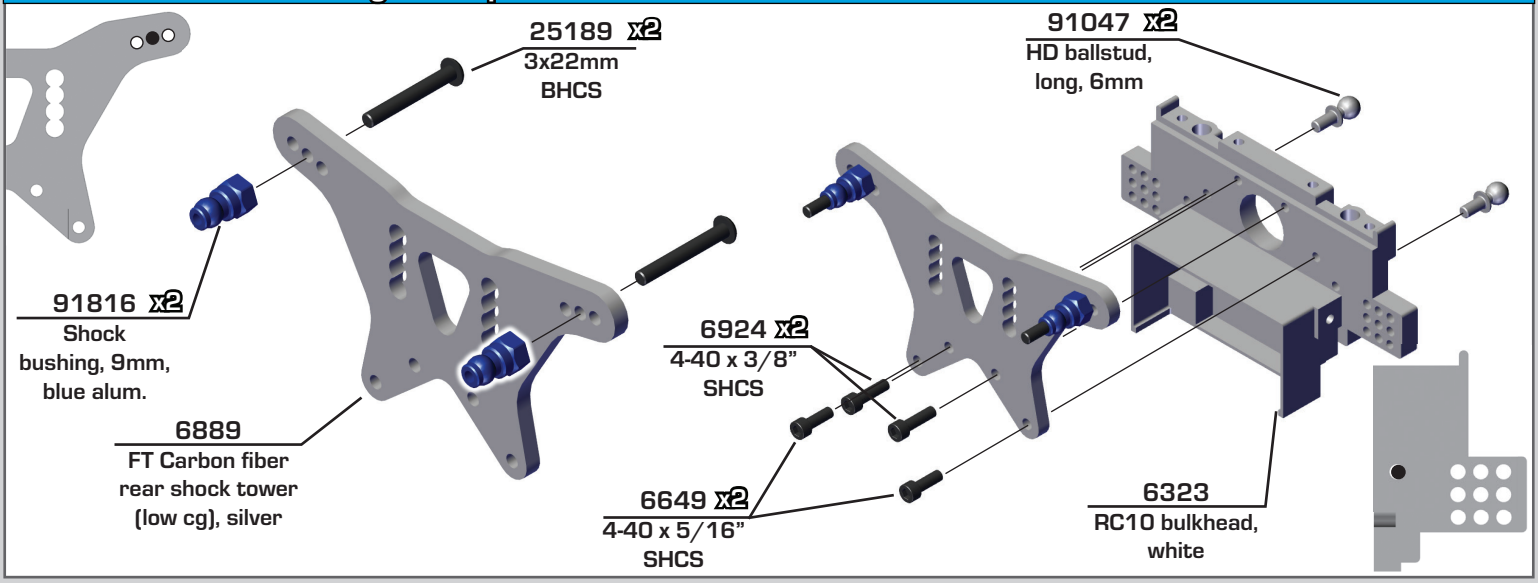

Rear Bulkhead Build - Bag D - Step 2

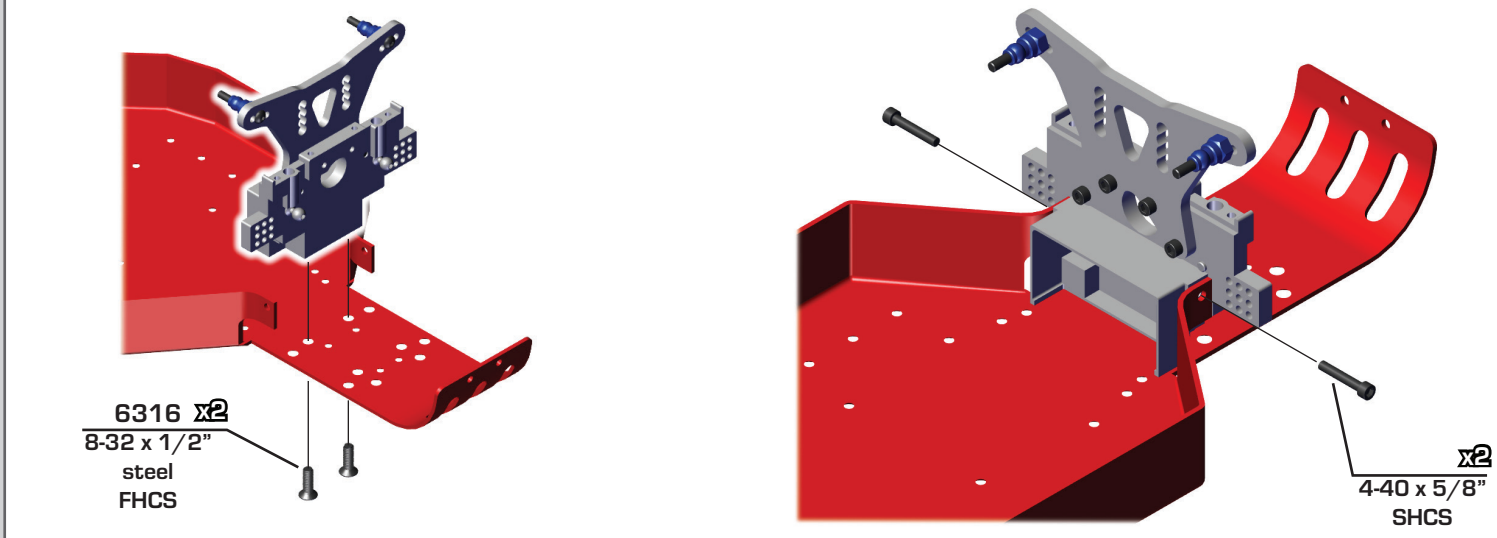

Rear Bulkhead Build - Bag D - Step 3

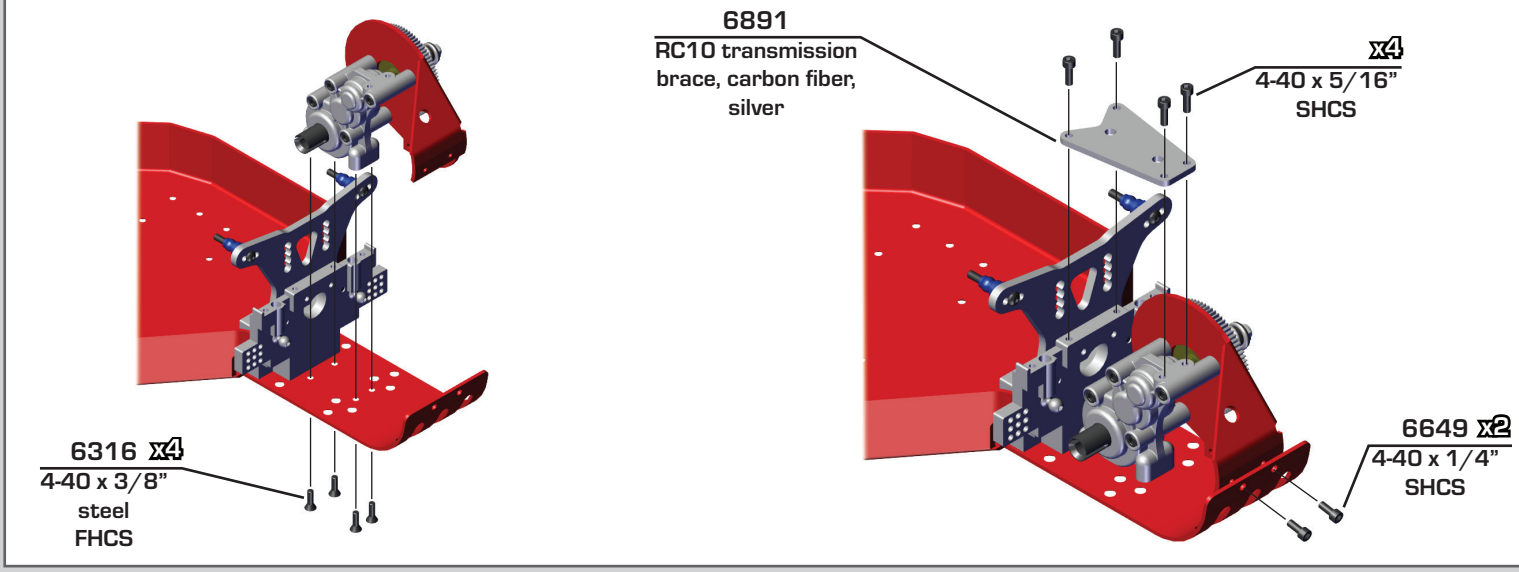

Rear Suspension Build - Bag E - Step 1

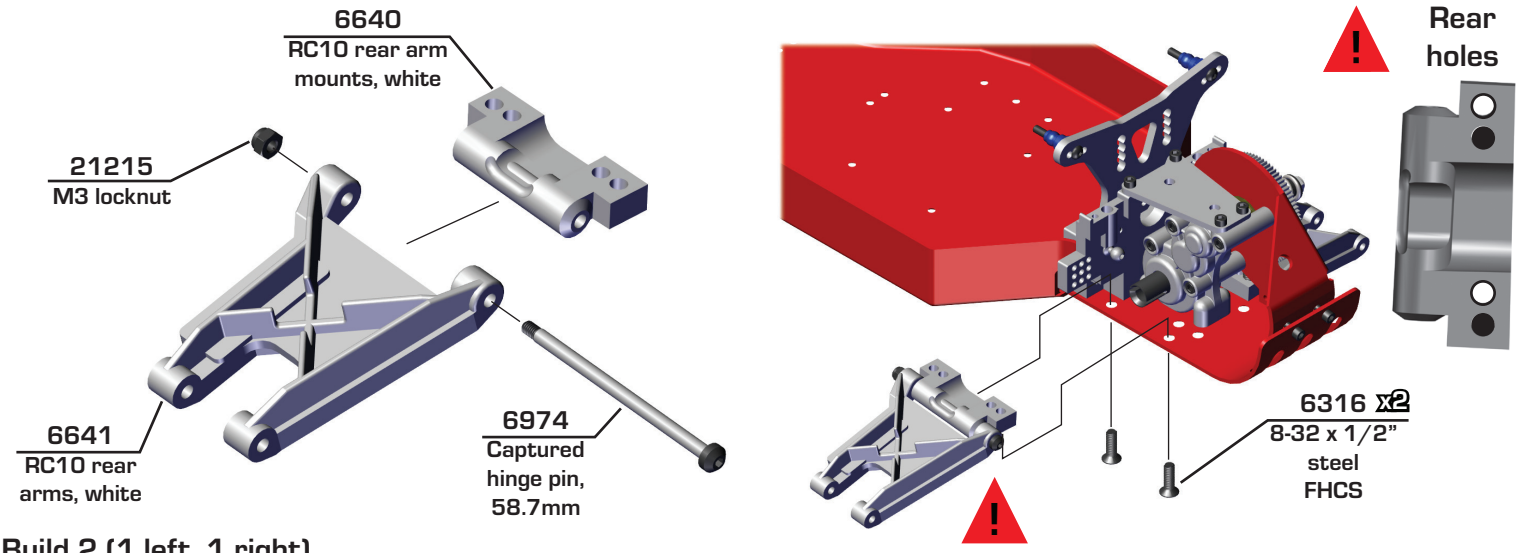

Build 2 (1 left, 1 right)

Rear Suspension Build - Bag E - Step 2

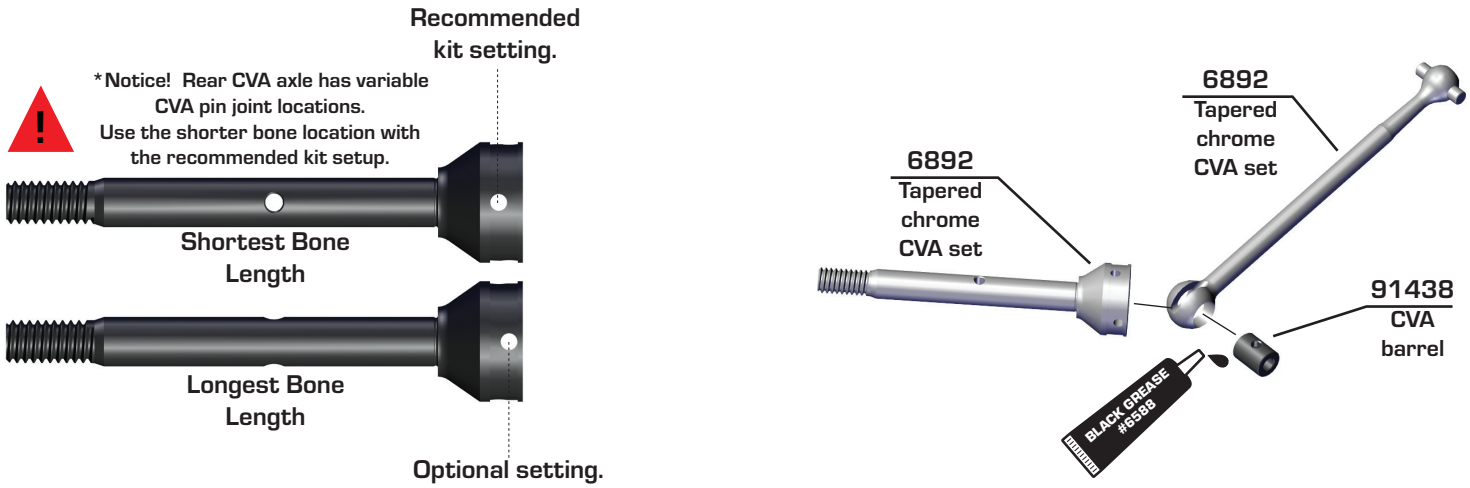

Build 2 (1 left, 1 right)

Rear Suspension Build - Bag E - Step 3

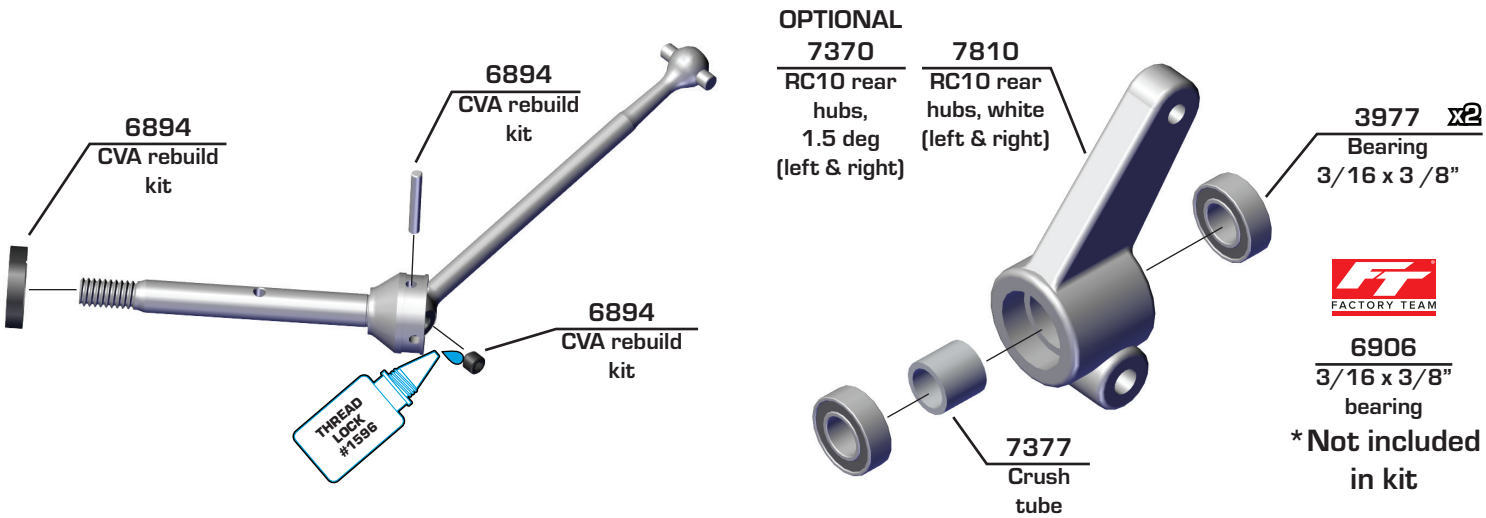

Build 2 (1 left, 1 right)

:: Rear Suspension Build - Bag E - Step 4

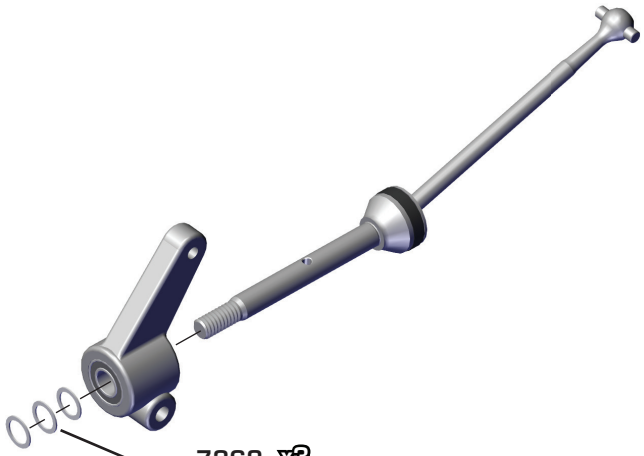

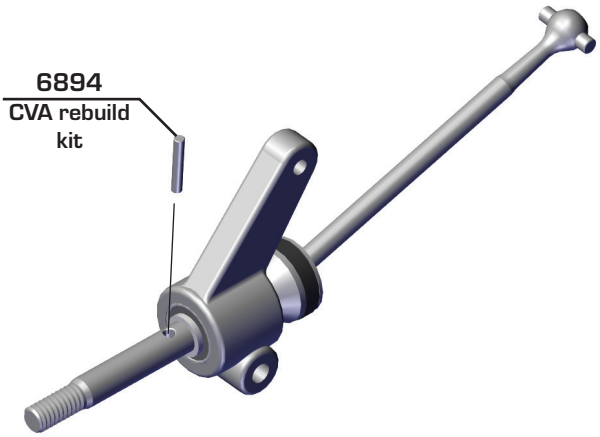

Build 2 (1 left, 1 right)

:: Rear Suspension Build - Bag E - Step 4

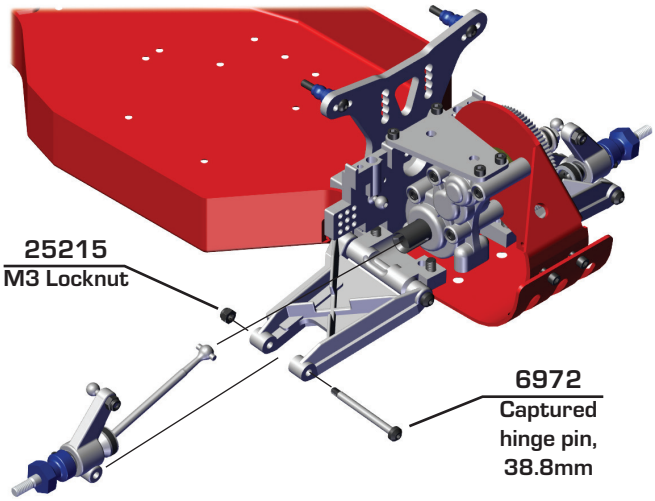

Build 2 (1 left, 1 right)

:: Turnbuckles Build - Bag F - Step 1

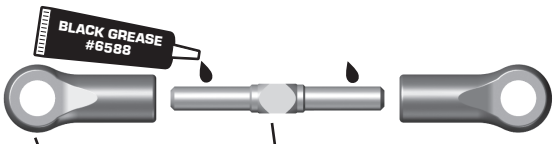

Stering Rack Turnbuckle 0.31” (8mm)

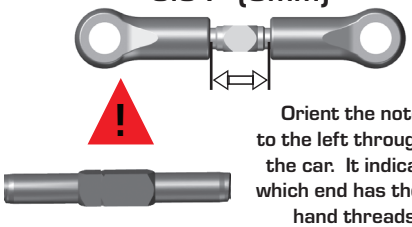

Orient the notch to the left throughout the car. It indicates which end has the left hand threads!

Measurements given are approximation. Camber should be set with a gauge at ride height.

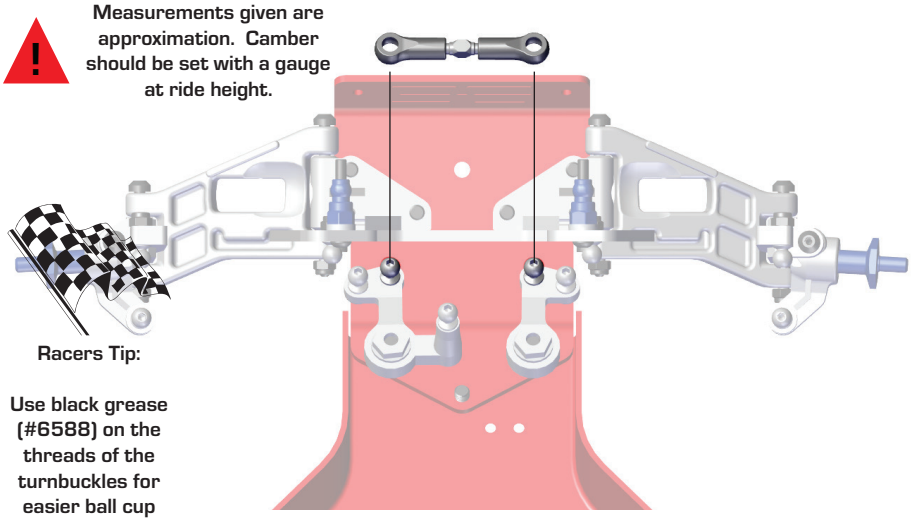

Racers Tip:

Use black grease (#6588) on the threads of the turnbuckles for easier ball cup installation!

Turnbuckles Build - Bag F - Step 2

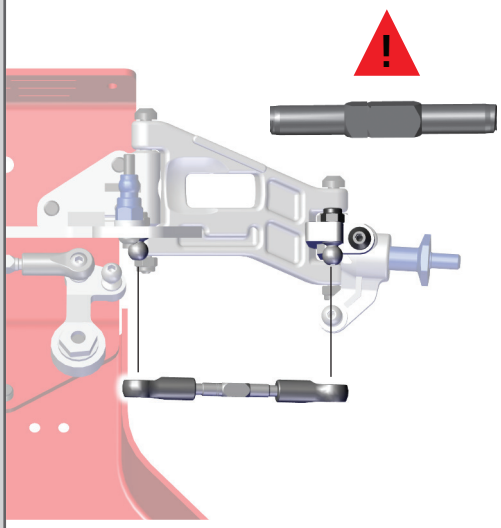

Build 2 (1 left, 1 right)

Orient the notch to the left throughout the car. It indicates which end has the left hand threads!

Racers Tip:

Use black grease (#6588) on the threads of the turnbuckles for easier ball cup installation!

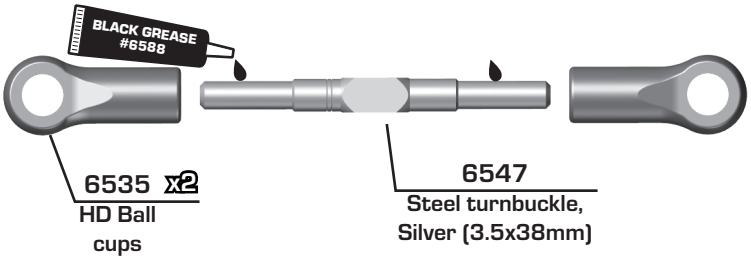

6535 x2
HD Ball cups

6547
Steel turnbuckle, Silver (3.5x38mm)

Front Camber Turnbuckle
0.90" (23.00mm)

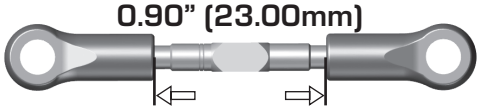

Recommended turnbuckle lengths are approximate.
Final recommended settings:
0 degree Front Toe in
-2 Degree Front Camber
-3 Degree Rear Camber

Turnbuckles Build - Bag F - Step 3

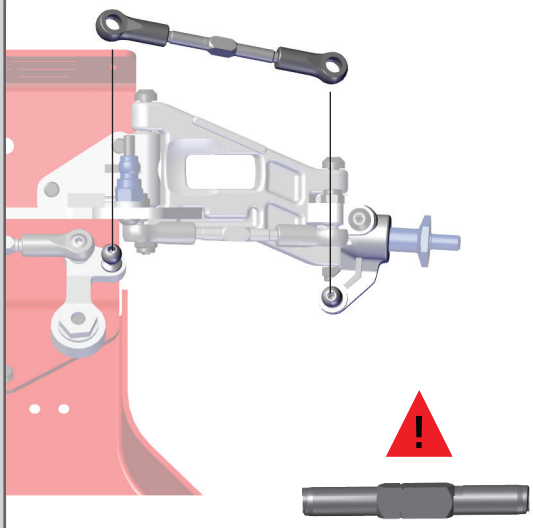

Build 2 (1 left, 1 right)

Racers Tip:

Use black grease (#6588) on the threads of the turnbuckles for easier ball cup installation!

Orient the notch to the left throughout the car. It indicates which end has the left hand threads!

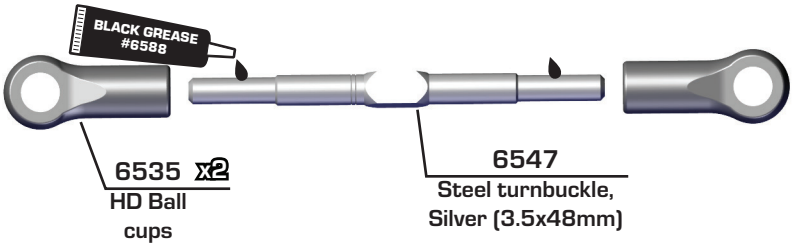

6535 x2
HD Ball cups

6547
Steel turnbuckle, Silver (3.5x48mm)

Steering Turnbuckle
1.18" (30.00mm)

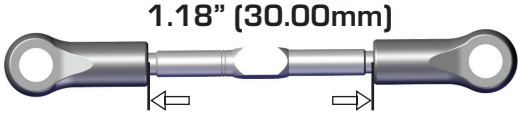

Recommended turnbuckle lengths are approximate.
Final recommended settings:
0 degree Front Toe in
-2 Degree Front Camber
-3 Degree Rear Camber

Turnbuckles Build - Bag F - Step 4

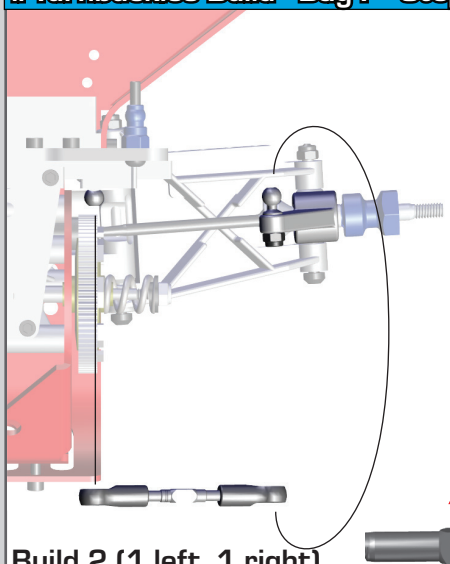

Build 2 (1 left, 1 right)

Racers Tip:

Use black grease (#6588) on the threads of the turnbuckles for easier ball cup installation!

Orient the notch to the left throughout the car. It indicates which end has the left hand threads!

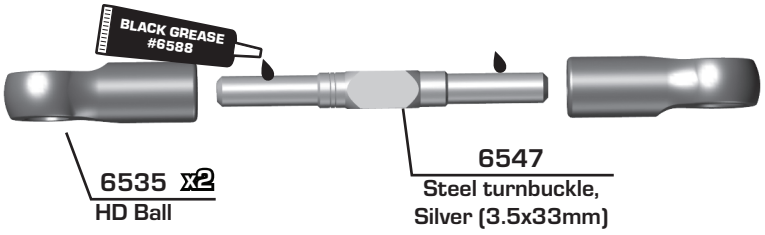

6535 x2
HD Ball cups

6547
Steel turnbuckle, Silver (3.5x33mm)

Rear Camber Turnbuckle
0.74" (19.00mm)

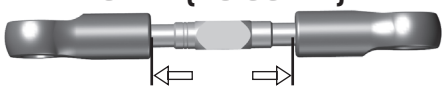

Recommended turnbuckle lengths are approximate.
Final recommended settings:
0 degree Front Toe in
-2 Degree Front Camber
-3 Degree Rear Camber

Shocks Build - Bag G - Step 1

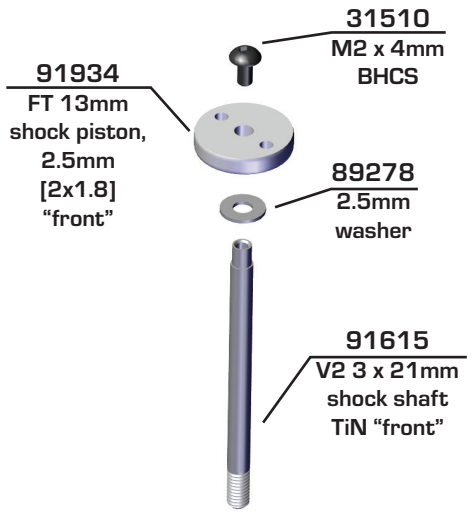

Mount the shock pistons with the number facing up!



Racers Tip:

Use marker to mark over the numbers on the pistons to make them easily visibilie!

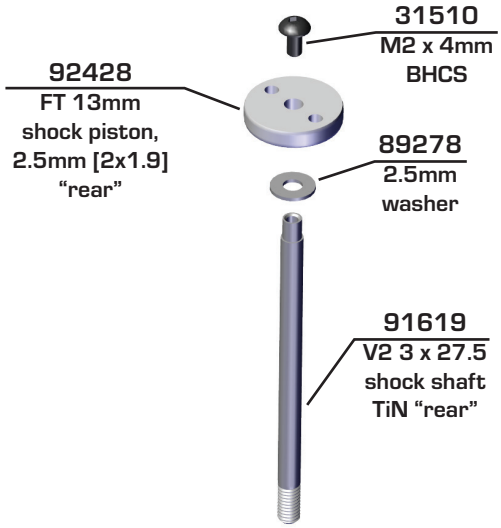

Build x2 front shocks

Build 2 rear shocks

Shocks Build - Bag G - Step 2

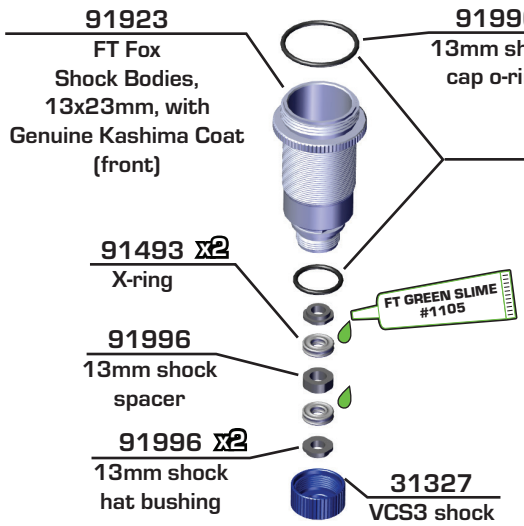

Lightly rub shock oil on the O-ring before installation!



Racers Tip:

Coating the O-rings with green slime (#1105) helps seal & reduce O-ring swell! Green slime not included in kit!

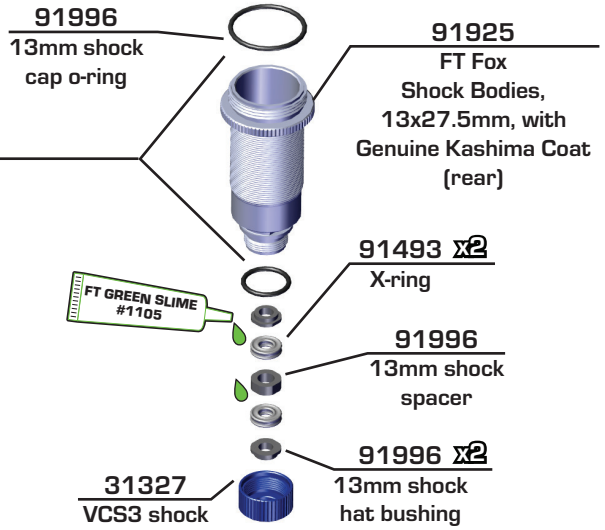

Build x2 front shocks

Build 2 rear shocks

Shocks Build - Bag G - Step 3

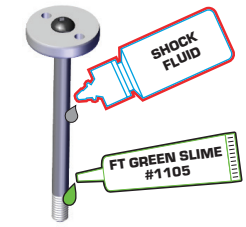



Lightly rub shock fluid or green slime on threads.

There are 3 lengths of shock eyelet in the kit. Pay attention to length when building as these affect your droop and uptravel.

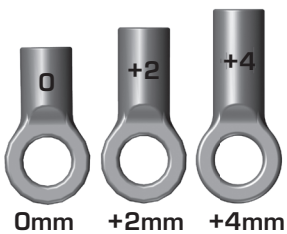

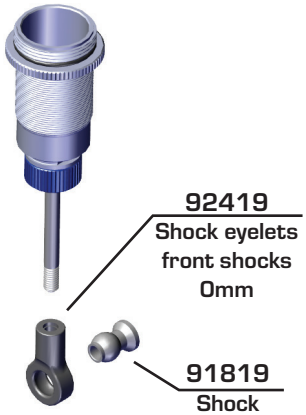

Note:
Extra shock limiters are included for tuning down travel and up travel. Please follow the manual for the recommended starting setup.

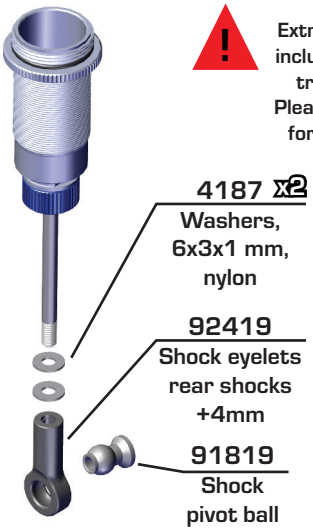

Build x2 front shocks

Build 2 rear shocks

Shocks Build - Bag G - Step 4

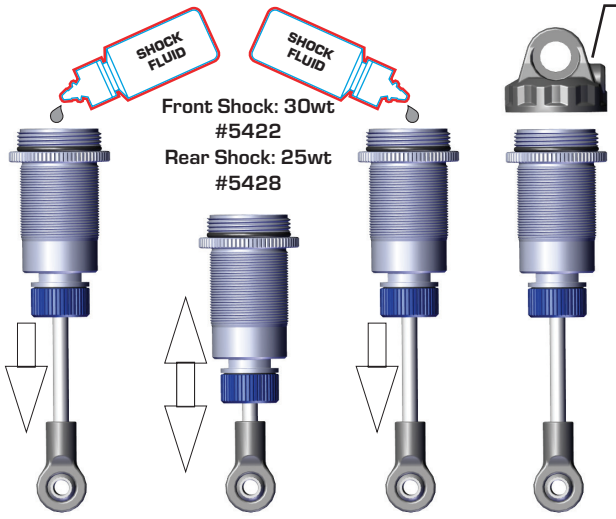

Front Shock: 30wt
#5422
Rear Shock: 25wt
#5428

Steps 2-3 | Steps 4-5 | Steps 6-7 | Step 8

91926
13mm Shock Cap

Shock Bleeding Steps:

1. Before assembly, get each bleed screw and thread it 1-2 turns into the shock cap, then remove the screw. This will make it easier when you are bleeding your shocks.
2. Pull shock shaft down.
3. Fill shock body 3/4 full with silicone shock fluid.
4. Slowly move the shock shaft up and down to remove air from under the piston.
5. Wait for bubbles to come to surface.
6. Fill shock body to top with silicone shock fluid.
7. Place a drop of oil in the cap and on cap threads.
8. Install cap (without bleed screw) and tighten completely.
9. Slowly compress shaft all the way to bleed excess silicone shock fluid out the hole in the cap (use rag around shock to catch excess fluid).
10. Install M2x4mm button head screw until snug while shaft is fully compressed.

31510
M2 x 4mm BHCS

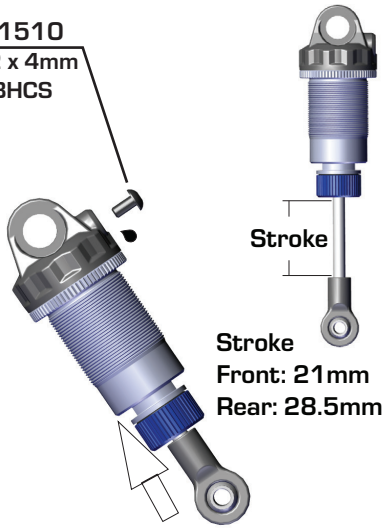

Stroke
Front: 21mm
Rear: 28.5mm

Steps 9-10

Shocks Build - Bag G - Step 5

91996 x4
13mm Threaded Collar O-ring



91928 x4
13mm Threaded Collar

Build x4

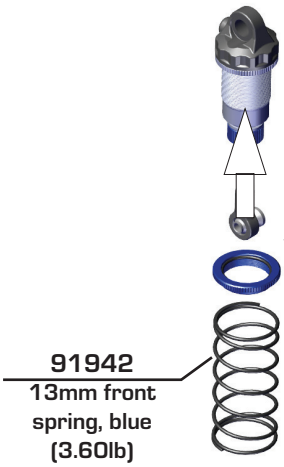

91942
13mm front spring, blue (3.60lb)



Racers Tip:

Use your finger to rub shock fluid on the O-ring for smoother adjustment!



91948
13mm rear spring, white (1.90lb)

Shocks Build - Bag G - Step 6

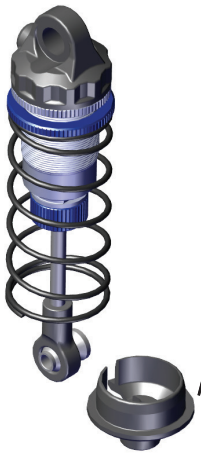



Screw collars to top. Use to adjust ride height.

91966
13mm Shock Spring Cup (Front - 5mm)

Build x2 front shocks

#91966 13mm Shock Spring Cups



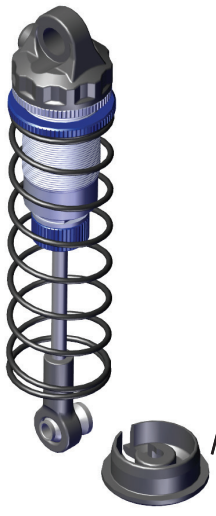

91966
13mm Shock Spring Cup (Rear - 0mm)

Build x2 rear shocks

:: Shocks Build - Bag G - Step 7

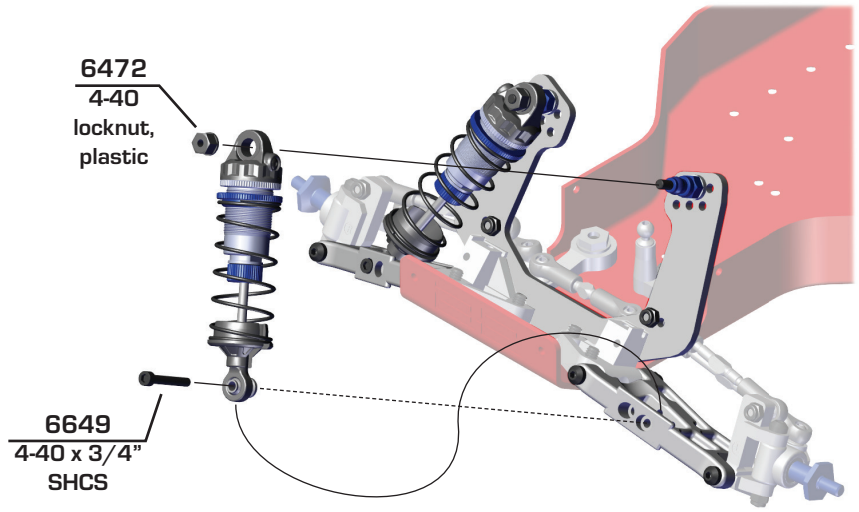

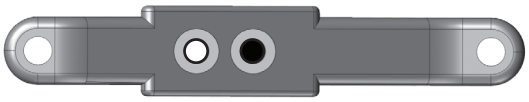

Build 2 (1 left, 1 right)

:: Shocks Build - Bag G - Step 8

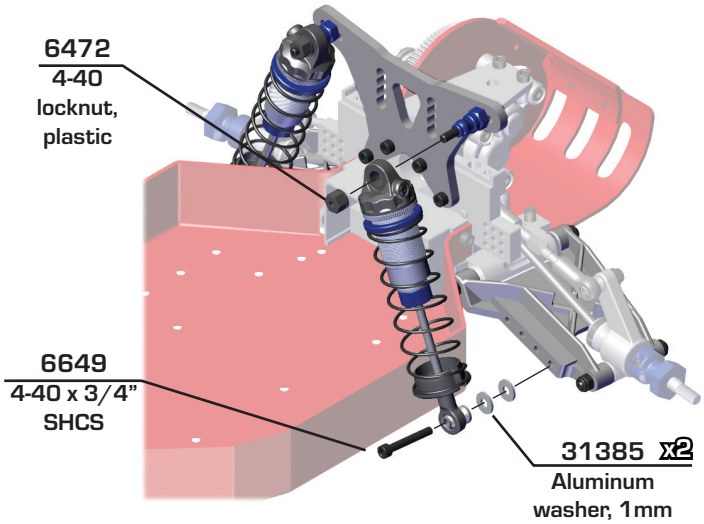

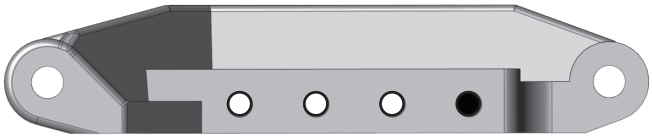

Build 2 (1 left, 1 right)

Build left and right sides!

:: Chassis Build - Bag H - Step 1

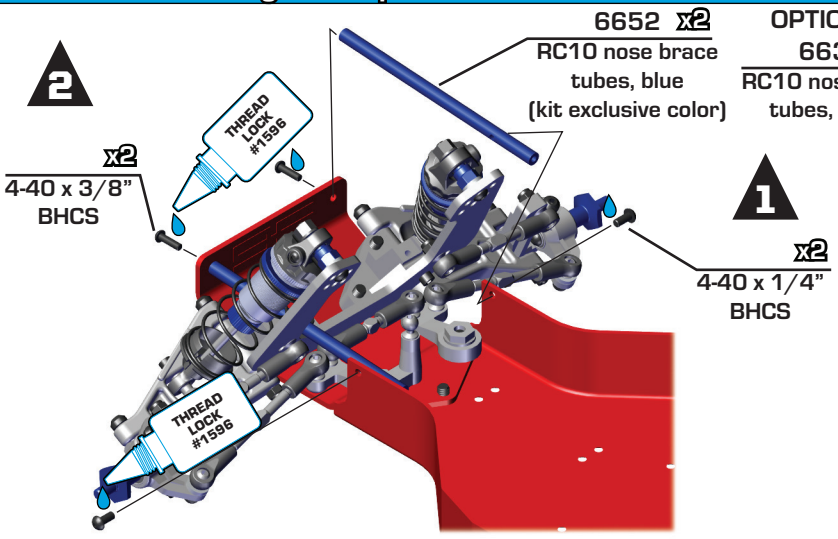

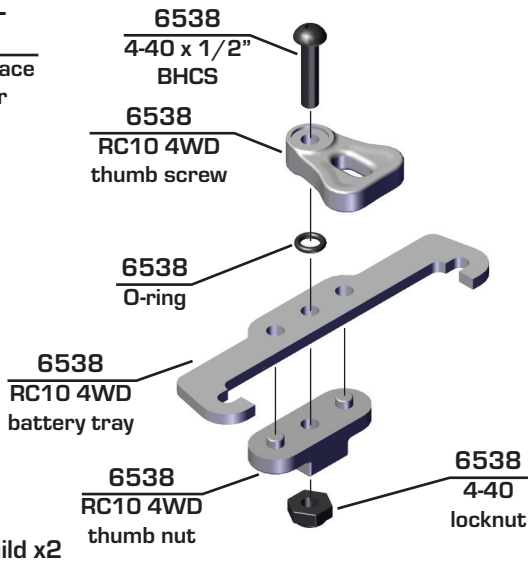

Build 2 (1 left, 1 right)

Build x2

:: Chassis Build - Bag H - Step 2

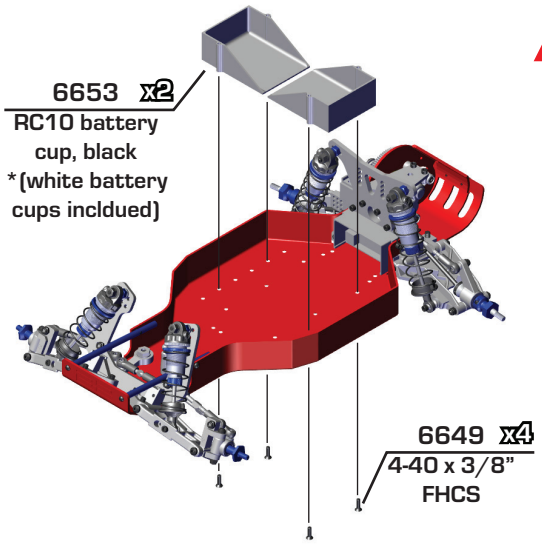

Note:
There are 3 options for battery mounting. Long pack inline, shorty pack inline and shorty pack sideways. Use only one battery cup in corresponding chassis hole for inline battery configuration. You can use the updated battery hold down in Bag H - Step 1 (page 15) or use the original style battery strap with SHCS's w/ hole and body clip to secure the battery if desired.

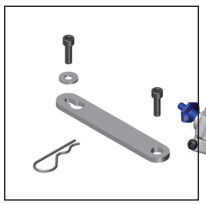

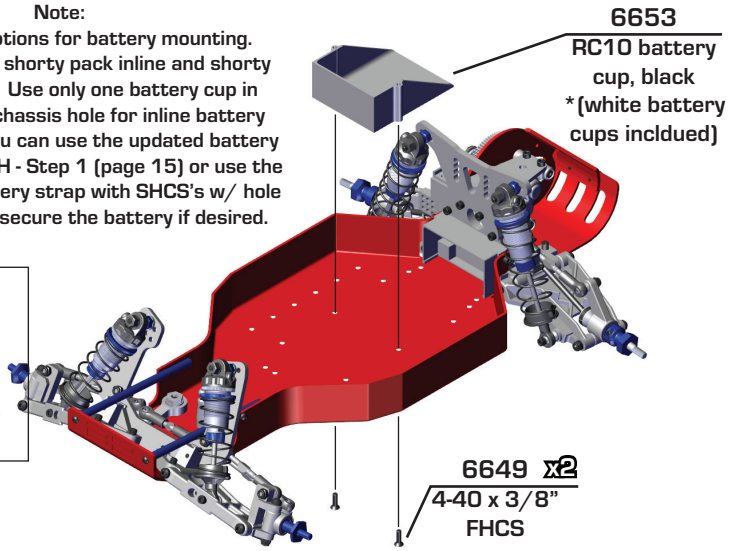

:: Chassis Build - Bag H - Step 3

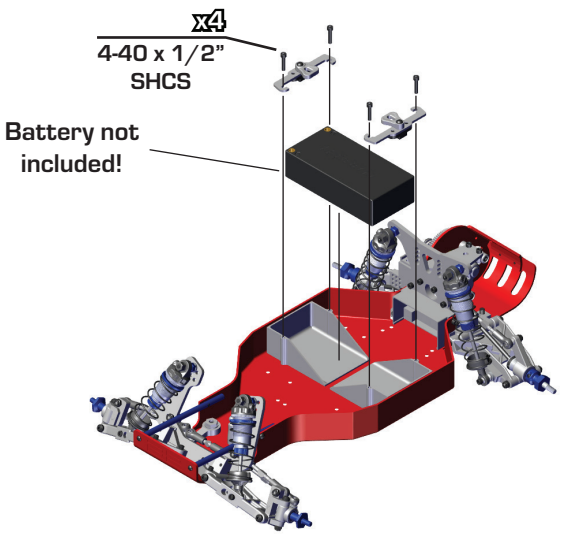

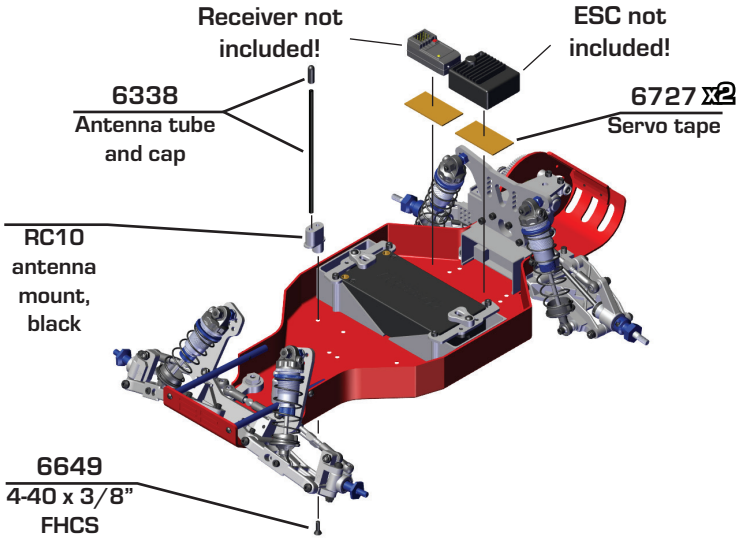

:: Steering Servo Build - Bag I - Step 1

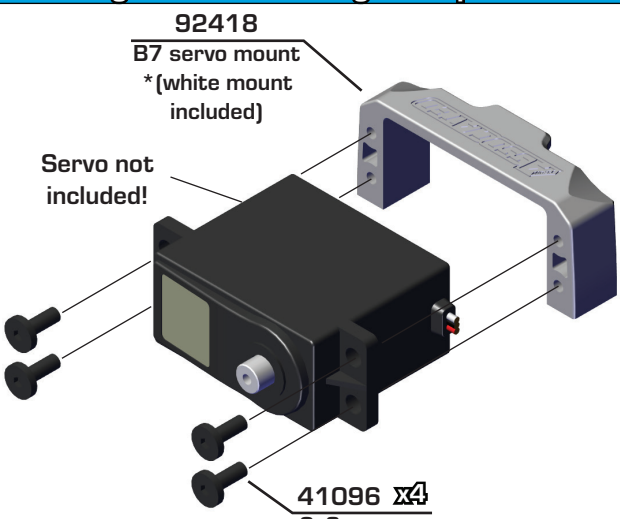

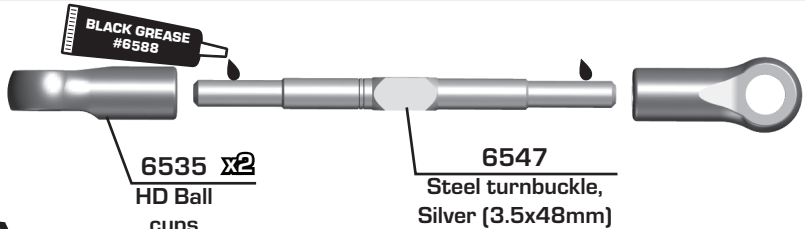



Racers Tip:

Use black grease (#6588) on the threads of the turnbuckles for easier ball cup installation!

Servo Turnbuckle
1.18" (30mm)





Orient the notch to the left throughout the car. It indicates which end has the left hand threads!

:: Steering Servo Build - Bag I - Step 2

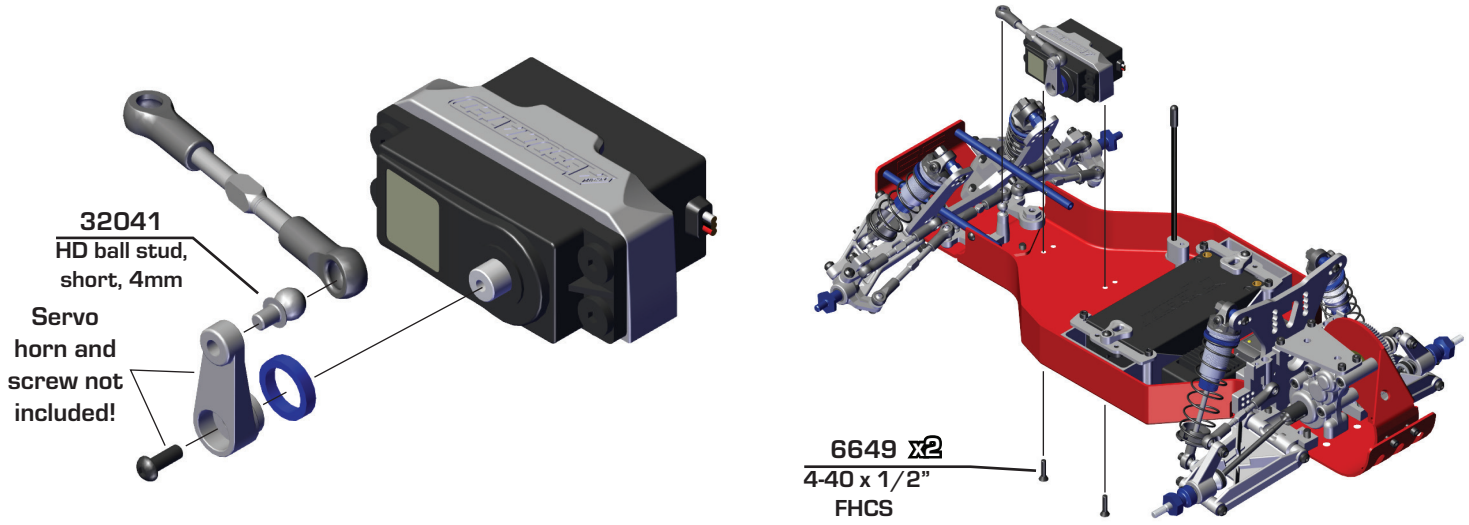

:: Wing Mount / Wheels / Accessories Build - Bag J - Step 1

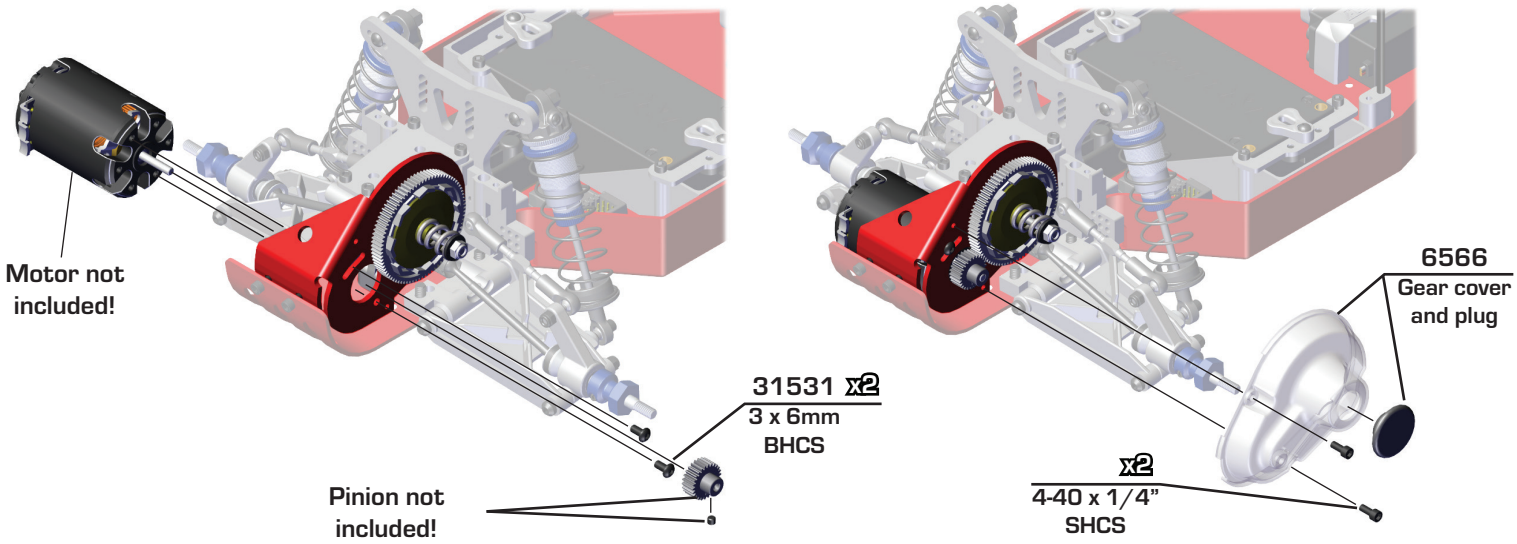

:: Wing Mount / Wheels / Accessories Build - Bag J - Step 2

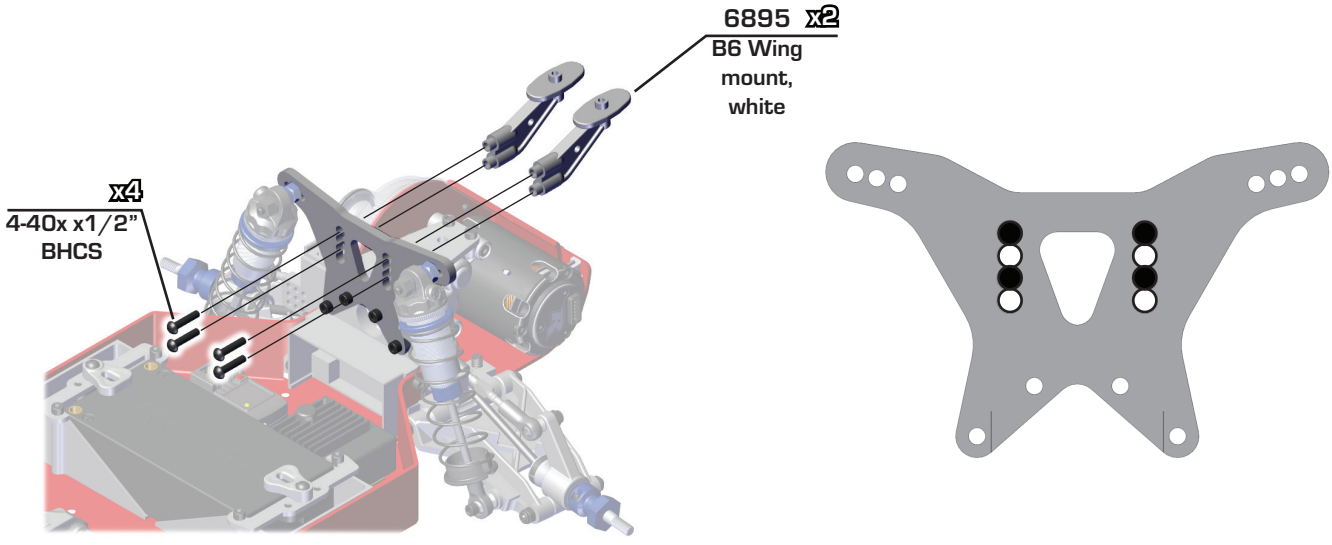

:: Wing Mount / Wheels / Accessories Build - Bag J - Step 3

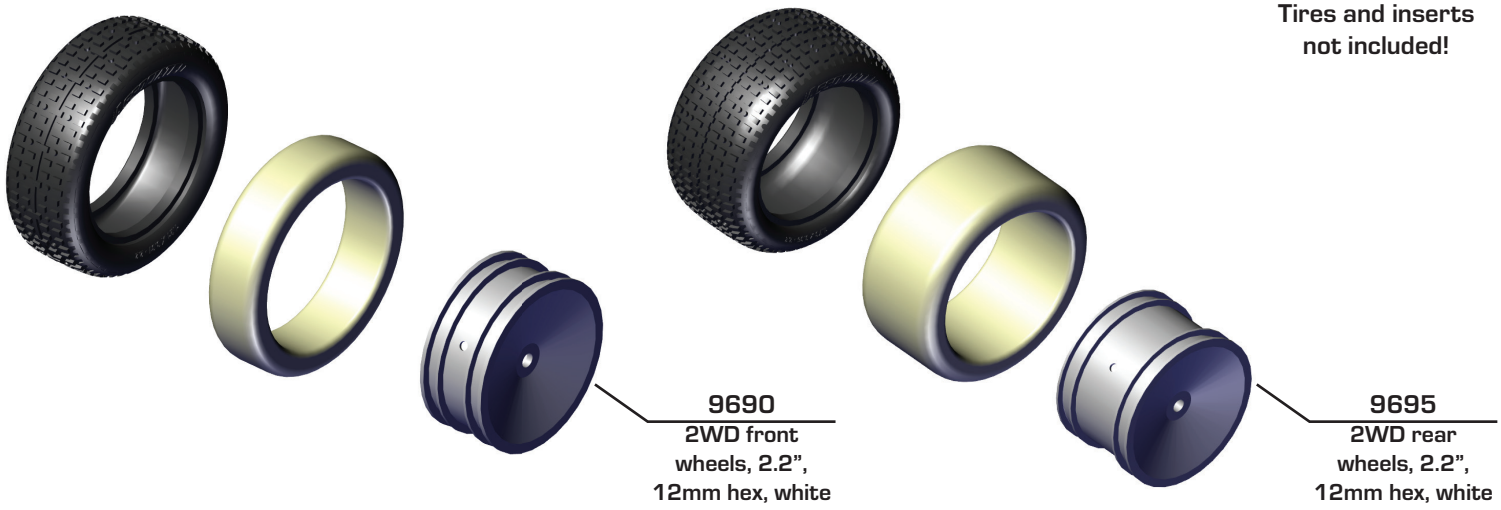

Build x2

:: Wing Mount / Wheels / Accessories Build - Bag J - Step 4

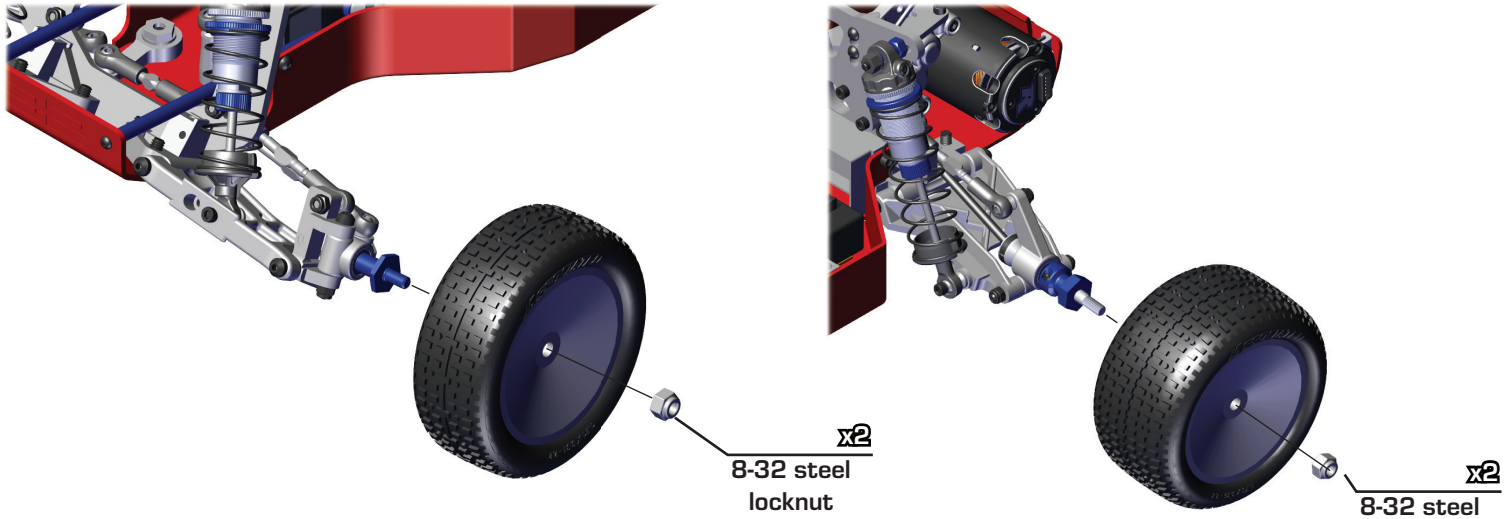

Build x2

:: Wing Mount / Wheels / Accessories Build - Bag J - Step 5

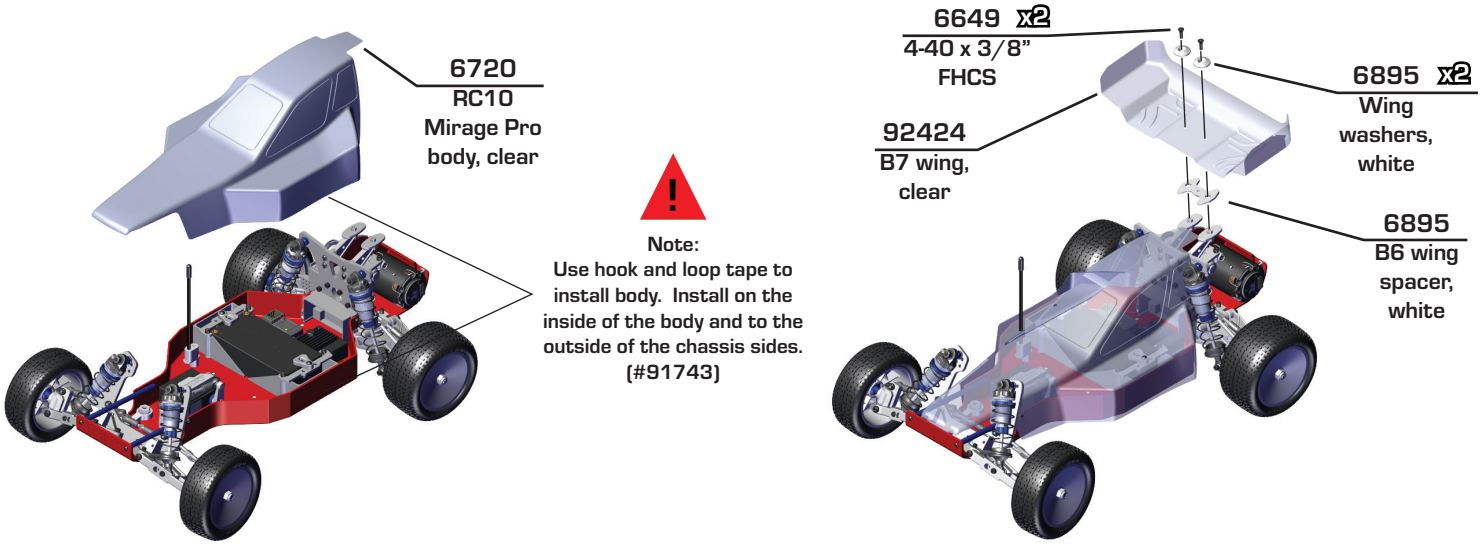

:: Painting Tips

Painting:

Your Kit requires a clear polycarbonate body. You will need to prep the body before you can paint it. Wash the INSIDE thoroughly with warm water and liquid detergent (do not use any detergents with scents or added hand lotion ingredients!). Dry the body using a clean, soft, lint-free cloth.
Use the supplied window masks to cover the windows from the INSIDE of the body (RC bodies get painted on the inside). Using high quality masking tape, apply tape to the inside of the body to create a design. Spray (use either rattle can or airbrush) the paint on the inside of the body (preferably dark colors first, lighter colors last). NOTE: ONLY use paint that is recommended for (polycarbonate) plastics. If you do not, you can destroy the body! After the paint has completely dried (usually after 24 hours), cut the body along the trim lines. Make sure to drill or use a body reamer to make the holes for the antenna if needed! Use hook and loop tape to secure the body to the side rails of the vehicle.

:: Notes

TEAM ASSOCIATED RC10 SETUP SHEET

Driver: Spencer Rivkin - 1st place (1989-1993) Class Date: October 19, 2025

Track: New Orleans Hotel/Casino Arena, Las Vegas, NV Event: 2025 Team Associated Vintage Champs

Conditions: _____ Indoor ☐ Outdoor ☐ Temp. _____ Rev.1

Ride Height / Wheelbase

Front Ride Height: 24mm

Rear Ride Height: 25mm

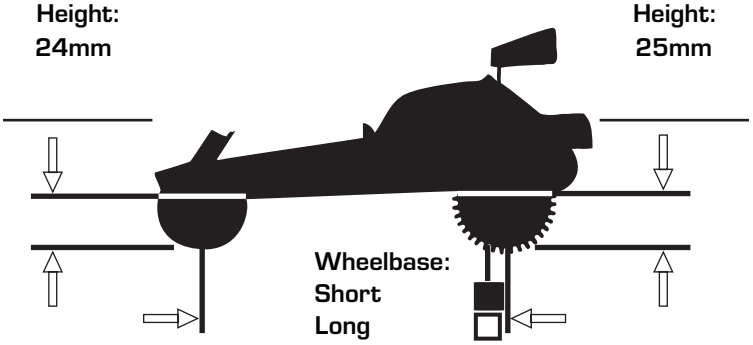

Wheelbase: Short ☐ Long ■

Front Suspension

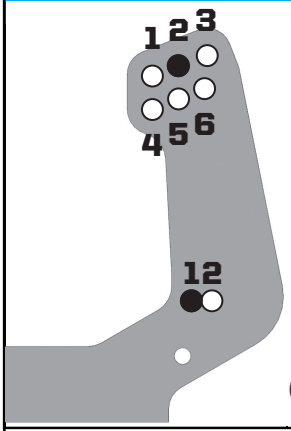

Camber: -1.5deg

Toe: 0.5deg out

Steering Block: Inline ■ Trailing ☐

Caster: 25° ■ 30° ☐



Rear Suspension

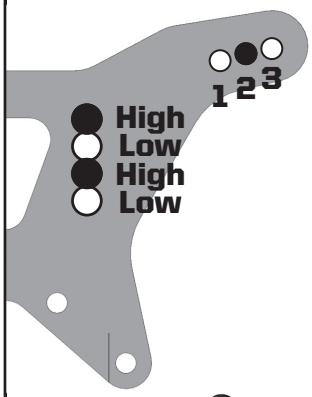

Camber: -1.5deg

Rear Hub Carriers: 0° ■ 1.5° ☐

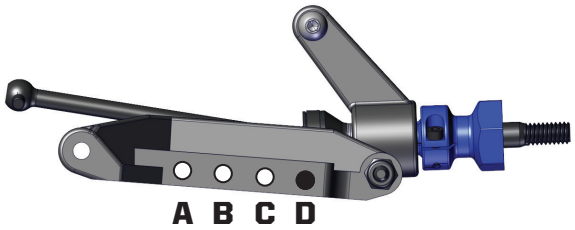

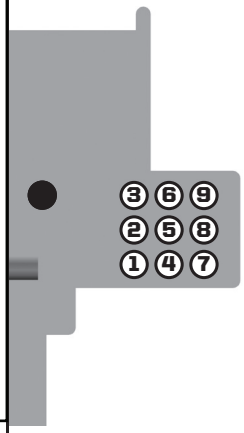

Rear Drive Shafts: CVA ■ Dogbone ☐

Front Shocks

Shock Body: Kit Shock Shaft: Kit

Spring: AE Blue 13mm Piston: 2x1.5 1x1.6 2mm

Shock Fluid: 35wt Eyelet: 0

Limiters: Int: _____ Ext: _____ Stroke: _____

Notes: _____

Rear Shocks

Shock Body: Kit Shock Shaft: Kit

Spring: AE Green 13mm Piston: 3x1.7 2mm

Shock Fluid: 27.5wt Eyelet: 0

Limiters: Int: _____ Ext: _____ Stroke: _____

Notes: _____

Motor / Battery

Motor & Wind: _____

Pinion: 25T Spur Gear: 75T

Battery: _____

Radio / ESC Settings

Radio: _____

Throttle / Brake: e.p.a: _____ Expo: _____

Servo: _____ Steering Expo: _____

ESC: _____

ESC Settings: _____

Drivetrain

Slipper: V2 slipper

2 Pads ■ 3 Pads ☐ 4 Pads ☐

Notes: _____

Other

Body Type: _____

Wing Type: _____

Weight

Battery Placement: Sideways with ESC & Rx mounted behind it

Ballast Weight: _____

Notes: _____

Rear Tires

Tire: _____

Compound: _____

Insert: _____ Wheel: _____

Front Tires

Tire: _____

Compound: _____

Insert: _____ Wheel: _____

Track Info

Surface:	Traction:	Conditions:	Moisture:
Dirt ☐	Low ☐	Grooved ☐	Wet ☐
Carpet ☐	Med ☐	Dusty ☐	Damp ☐
Astro ☐	High ☐	Smooth ☐	Dry ☐
Multi ☐		Bumpy ☐	
		Hard Pack ☐	
		Loamy ☐	

Race and Vehicle Comments

Qualify: _____ Main: _____ Finish: _____ TQ: ___

Comments: _____

:: For more setups, visit RC10.com and click on "Setup Sheets"

TEAM ASSOCIATED RC10 SETUP SHEET

Driver: _____ Date: _____

Track: _____ Event: _____

Conditions: _____ Indoor ☐ Outdoor ☐ Temp. _____ Rev.1

Ride Height / Wheelbase

Front Ride Height: _____ Rear Ride Height: _____

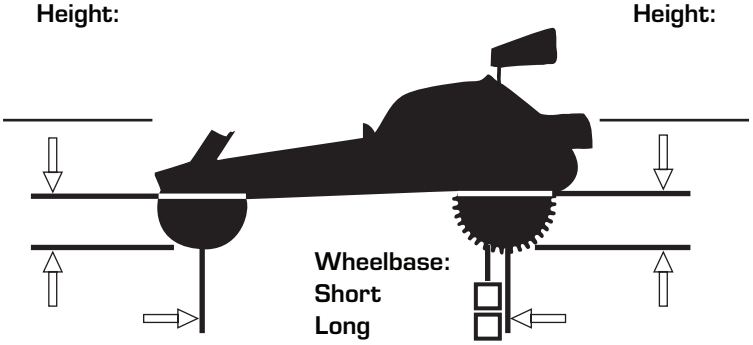

Front Suspension

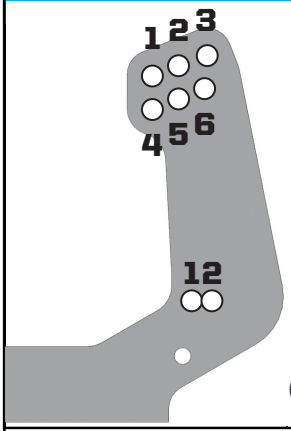

Camber: _____

Toe: _____

Steering Block:
Inline ☐
Trailing ☐

Caster:
25° ☐
30° ☐



Rear Suspension

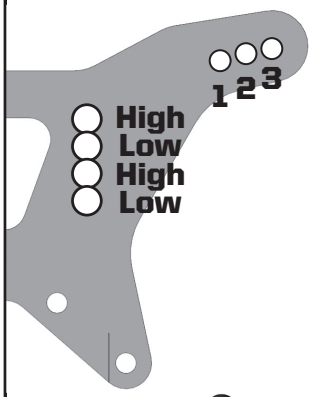

Camber: _____

Rear Hub Carriers:
0° ☐
1.5° ☐

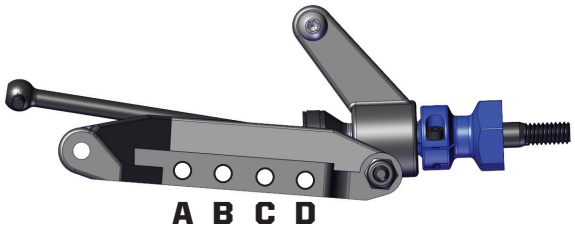

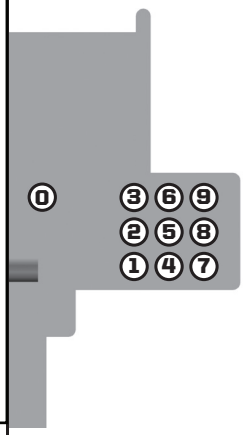

Rear Drive Shafts:
CVA ☐
Dogbone ☐

Front Shocks

Shock Body: _____ Shock Shaft: _____
Spring: _____ Piston: _____
Shock Fluid: _____ Eyelet: _____
Limiters: Int: _____ Ext: _____ Stroke: _____
Notes: _____

Rear Shocks

Shock Body: _____ Shock Shaft: _____
Spring: _____ Piston: _____
Shock Fluid: _____ Eyelet: _____
Limiters: Int: _____ Ext: _____ Stroke: _____
Notes: _____

Motor / Battery

Motor & Wind: _____
Pinion: _____ Spur Gear: _____
Battery: _____

Drivetrain

Slipper: _____
2 Pads ☐ 3 Pads ☐ 4 Pads ☐
Notes: _____

Weight

Battery Placement: _____
Ballast Weight: _____
Notes: _____

Front Tires

Tire: _____
Compound: _____
Insert: _____ Wheel: _____

Race and Vehicle Comments

Qualify: _____ Main: _____ Finish: _____ TQ: ___
Comments: _____

Radio / ESC Settings

Radio: _____
Throttle / Brake: e.p.a: _____ Expo: _____
Servo: _____ Steering Expo: _____
ESC: _____
ESC Settings: _____

Other

Body Type: _____
Wing Type: _____

Rear Tires

Tire: _____
Compound: _____
Insert: _____ Wheel: _____

Track Info

Surface:	Traction:	Conditions:	Moisture:
Dirt ☐	Low ☐	Grooved ☐	Wet ☐
Carpet ☐	Med ☐	Dusty ☐	Damp ☐
Astro ☐	High ☐	Smooth ☐	Dry ☐
Multi ☐		Bumpy ☐	
		Hard Pack ☐	
		Loamy ☐	

:: For more setups, visit RC10.com and click on "Setup Sheets"

ASSOCIATED ELECTRICS
Since 1964

Associated Electrics, Inc.
21062 Bake Parkway Lake Forest, CA 92630 USA

call: (949) 544-7500 - fax: (949) 544-7501

Check out the following web sites for all of our kits, current products, new releases, setup help, tips, and racing info!

www.AssociatedElectrics.com

FOLLOW US ON SOCIAL MEDIA

TeamAssociated ReedyPower ElementRC FactoryTeam51	@TeamAssociatedRC @ReedyPower @Element_RC @FactoryTeam_RC	@Team_Associated @ReedyPower	@Associated_Electrics	TeamAssociatedRC ElementRC	TeamAssociated Reedy Element-rc